staff report

TO: Honorable Mayor and Members of the City Council

ATTENTION: Jeffrey L. Stewart, City Manager

FROM: Len Gorecki, Director of Public Works

SUBJECT: Consideration and possible action to adopt Resolution No. 16-XX – A Resolution approving the design and plans for the construction of the Parking District No. 1 Improvements from Belmont Street and Laurel Street (Specifications No. 15/16-02), pursuant to Government Code § 830.6, and establishing a project payment account; and authorize solicitation of bids.

DATE: January 14, 2016

EXECUTIVE SUMMARY

This action would approve the Plans and Specifications, ensure the City's design immunity against any claim for damages arising from the plan or design, and authorize the Public Works to advertise for bids for the Parking District No. 1 Improvements between Belmont Street and Laurel Street (Specifications No. 15/16-02). The award of a contract will be brought before the City Council at a later date for approval.

RECOMMENDATION TO CITY COUNCIL

1) Adopt Resolution No. 16-XX and authorize solicitation of bids; or

2) Alternatively, discuss and take other action related to this item.

FISCAL IMPACT

The estimated project cost for construction and contingency is $350,000. $168,500 has been budgeted in Account No. 011-47028-9000, General Funds. At the time of the award of contract, staff intends to seek a budget amendment to the Fiscal Year 2015-16 Operating Budget to transfer additional funding to the project payment account.

DISCUSSION

The City previously requested a proposal from Hartzog & Crabill, Inc. (HCI), for improvements to the lighting system in Parking District No. 1. In 2005, HCI completed a photometric analysis of the existing lighting system for the portion located west of Bellflower Boulevard between Belmont Street and Laurel Street. Subsequent to the completion of this task, the remainder of the project was put on hold for a number of years.

Recently, the City requested that HCI complete the plans and specifications to provide the necessary construction documents to construct the proposed improvements. The project scope will include the use of more efficient Light Emitting Diode (LED) light fixtures, repaving of the existing parking lot, and construction of pedestrian paths and disabled access ramps. The Plans and Specifications and an engineer's estimate of construction costs have been developed. Upon City Council approval of the plans and specifications, staff will solicit bids for construction of the improvements.

CEQA

Pursuant to the California Environmental Quality Act (CEQA) (Public Resources Code §§ 21000, et seq.) and CEQA Guidelines (California Code of Regulations, Title 14, §§ 15000, et seq.), the City conducted an environmental assessment. Based on the environmental assessment, the project was determined to be categorically exempt pursuant to CEQA Guidelines § 15301 (Existing Facilities).

ATTACHMENTS

Resolution No. 16-XX 3
Plans and Specifications 5

Doc 326864

CITY OF BELLFLOWER

RESOLUTION NO. 16-XX

A RESOLUTION APPROVING THE DESIGN AND PLANS FOR THE CONSTRUCTION OF THE PARKING DISTRICT NO. 1 IMPROVEMENTS FROM BELMONT STREET AND LAUREL STREET (SPECIFICATIONS NO. 15/16-02), PURSUANT TO GOVERNMENT CODE § 830.6, AND ESTABLISHING A PROJECT PAYMENT ACCOUNT

THE CITY COUNCIL RESOLVES AS FOLLOWS:

SECTION 1. The City Council finds and declares as follows:

A. The City retained Hartzog & Crabill, Inc. ("Consultant"), as the engineers to design and prepare the plans for the Parking District No. 1 Improvements ("Project");

B. The Consultant informed the Director of Public Works that these plans are complete and that construction of the Project may begin;

C. The Director of Public Works reviewed the completed design and plans for the Project and agrees with the Consultant that the plans are complete and the Project may be constructed;

D. The City Council wishes to obtain the immunities set forth in Government Code § 830.6 with regard to the plans and construction of the Project; and

E. The City reviewed the project's environmental impacts under the California Environmental Quality Act (Public Resources Code §§ 21000, et seq., "CEQA") and the regulations promulgated thereunder (14 Cal. Code of Regulations §§ 15000, et seq., the "CEQA Guidelines"). The Project is categorically exempt from additional environmental review pursuant to CEQA Guidelines § 15301 (Existing Facilities).

SECTION 2. Design Immunity; Authorization.

A. The design and plans for the Project are determined to be consistent with the City's standards and are approved.

B. The design approval set forth in this Resolution occurred before actual work on the Project construction commenced.

C. The approval granted by this Resolution conforms to the City's General Plan.

D. The Director of Public Works, or designee, is authorized to act on the City's behalf in approving any alterations or modifications of the design and plans approved by this Resolution.

E. The approval and authorization granted by this Resolution is intended to avail the City of the immunities set forth in Government Code § 830.6.

SECTION 3. Project Payment Account. For purposes of the Contract Documents administering the Project, the City Council directs the City Manager, or designee, to establish a fund containing sufficient monies from the current fiscal year budget to pay for the Project ("Project Payment Account"). The Project Payment Account is the sole source of funds available for the Contract Sum, as defined in the Contract Document administering the Project.

SECTION 4. The Mayor, or presiding officer, is authorized to execute this Resolution signifying its adoption by the City Council of the City of Bellflower and the City Clerk, or duly appointed deputy, may attest thereto.

SECTION 5. This Resolution will become effective immediately upon adoption.

PASSED, APPROVED, AND ADOPTED BY THE CITY COUNCIL OF THE CITY OF BELLFLOWER ON THIS ___ DAY OF _____ 2016.

_____
Scott A. Larsen, Mayor

ATTEST:

_____
Mayra Ochiqui, City Clerk

APPROVED AS TO FORM:

_____
Karl H. Berger, Interim City Attorney

Doc 330170

CITY OF BELLFLOWER

BELLFLOWER, CALIFORNIA

PLANS
SPECIFICATIONS
AND CONTRACT DOCUMENTS
FOR THE

PARKING DISTRICT NO. 1 IMPROVEMENTS
FROM BELMONT STREET TO LAUREL STREET

SPECIFICATIONS NO. 15/16-02

PREPARED BY:

CITY OF BELLFLOWER
PUBLIC WORKS DEPARTMENT
16600 CIVIC CENTER DRIVE
BELLFLOWER, CALIFORNIA 90706
(562) 804-1424

For questions regarding these Bid Specifications or project, please contact:
Project Manager: Jerry Stock
(562) 804-1424, ext. 2218

BIDS DUE: _____

These plans and specifications are the exclusive property of the City of Bellflower and shall not be used in any manner without prior consent of the City of Bellflower. Any reuse of these plans and specifications by others shall be at other's sole risk and without liability to the City of Bellflower.

CITY OF BELLFLOWER

PARKING DISTRICT NO. 1 IMPROVEMENTS FROM BELMONT STREET TO LAUREL STREET

SPECIFICATIONS NO. 15/16-02

TABLE OF CONTENTS

SECTION **PAGE**

NOTICE INVITING SEALED BIDS N-1

INSTRUCTIONS TO BIDDERS I-1

BID DOCUMENTS ***(All Bid Documents must be submitted by bid date)***
Bid B-1
Bidders Information B-3
List of Subcontractors.....B-6
References.....B-7
Designation of Sureties B-10
Project Bid Sheet B-11
Acknowledgment of Addenda.....B-14
Bid Bond.....B-15
Non Collusion Declaration.....B-17

CONTRACT DOCUMENTS
Agreement..... C-1
Faithful Performance Bond..... FPB-1
Payment Bond..... PB-1
Worker's Compensation Insurance Certificate WC-1
Declaration of Sufficiency of Funds……..DSF-1

GUARANTY G-1

GENERAL SPECIFICATIONS
Addenda.....GS-1

CITY OF BELLFLOWER

PARKING DISTRICT NO. 1 IMPROVEMENTS FROM BELMONT STREET TO LAUREL STREET

SPECIFICATIONS NO. 15/16-02

TABLE OF CONTENTS

SECTION	PAGE
Standard Specifications	GS-1
Wage Rates and Labor Code Requirements	GS-2
Resolution of Construction Claims/Limitations for Claims/Waiver of Claims	GS-3
Waiver of All Claims	GS-7
SPECIAL PROVISIONS	SP-1
Scope of Work	SP-2
Insurance Requirements	SP-8
FINAL CLOSEOUT AGREEMENT AND RELEASE OF ALL CLAIMS	ATTACHED

NOTICE INVITING SEALED BIDS FOR THE PARKING DISTRICT NO. 1 IMPROVEMENTS FROM BELMONT STREET TO LAUREL STREET

SPECIFICATIONS NO. 15/16-02

PUBLIC NOTICE IS HEREBY GIVEN sealed bids will be received by the City of Bellflower ("Agency" or "City"), for furnishing all materials, equipment, tools, labor, and incidentals as required for the above stated project in accordance with the specifications and drawings on file at the Public Works Department of the Agency.

SCOPE OF WORK

The work to be performed or executed under these specifications consists of furnishing all materials ***EXCEPT THE PARKING LOT AND PEDESTRIAN LIGHT STANDARDS AND APPURTENANT FEATURES, IRRIGATION CONTROL VALVES AND IRRIGATION MAINLINE AND ALL APPURTENANT IRRIGATION COMPONENTS TO BE OWNER FURNISHED CONTRACTOR INSTALLED,*** equipment, tools, labor, and incidentals as required by the contract documents to construct the above stated project. It is the intent of this contract to have the contractor perform the PARKING DISTRICT NO. 1 IMPROVEMENTS FROM BELMONT STREET TO LAUREL STREET, and other appurtenances in accordance with SPECIFICATIONS NO. 15/16-02. All work is located in the City of Bellflower.

LICENSE REQUIREMENT

At the time of contract award, the contractor shall possess a Class A or C-10 Contractor's License. No bid will be accepted from a contractor who has not been licensed in accordance with the Provisions of Chapter 9, Division III, of the Business and Professions Code of the State of California at the time the bid is submitted.

MANDATORY JOBSITE WALK

Mandatory jobsite walk will be held at TIME, DATE at 16639 Bellflower Boulevard, Bellflower, CA 90706. Prospective bidders will have opportunity to examine the project site and are encourage to raise any questions associated with the project and site. Attendance of the jobsite walk is mandatory for parties wishing to submit a bid as the Prime Contractor.

BID OPENING

Bids shall be prepared on the approved forms in conformance with the Instructions to Bidders. Bids shall be submitted in sealed envelopes marked on the outside, **"SEALED BID FOR THE PARKING DISTRICT NO. 1 IMPROVEMENTS FROM BELMONT STREET TO LAUREL STREET, SPECIFICATIONS NO. 15/16-02 - DO NOT OPEN WITH REGULAR MAIL,"** and shall be delivered during the business hours of 8:00 a.m. to 5:30 p.m. Monday through Thursday and 8:00 a.m. to 4:30 p.m. on alternating Fridays, except holidays and except on the City's alternating Fridays off. Bids will be received at the Office of the Bellflower City Clerk in City Hall at or before **TIME, DATE,** at which time all bids received will be publicly opened, examined, and declared by the City Clerk, or her Deputy, in the Council Chambers, Bellflower City Hall, 16600 Civic Center Drive, Bellflower, California, 90706. Each bid must be accompanied by a certified or cashier's check or bidder's bond payable to the order of the City of Bellflower or cash for an amount not less than ten percent (10%) of the bid price submitted, and

the check, bond, or cash deposit of the successful bidder shall be forfeited to the City if such bidder fails to enter into the contract to perform the work within ten (10) days after written notice of award. All bidders and members of the public are hereby invited to be present at and to hear and observe the opening, examination and declaring of bids.

More information may be obtained by contacting the Project Manager, Jerry Stock, at (562) 804-1424, ext. 2218 or at jstock@bellflower.org.

BID REVIEW

The Agency reserves the right, after opening bids, to reject any or all bids, or to make award to the lowest responsive and responsible bidder and reject all other bids, to waive any informality in the bidding, to accept any bid or portion thereof; and to take all bids under advisement for a period of forty-five (45) days after the bids are opened. Bids will be compared on the basis of the lump sum base total. Nothing in this section shall relieve the contractor of all obligations relative to starting work as required elsewhere in these specifications.

TIME LIMIT AND NOTICE TO PROCEED

Following Notice to Proceed, the contractor shall have thirty (30) working days to complete the work. Extended hours and/ or weekend work schedules may be considered by the contractor. The contractor will not be allowed to start work prior to the date in the Notice to Proceed and not until he has returned the executed contract and has submitted contract bonds and liability insurance acceptable to the Agency as required in the Specifications.

PLANS AND SPECIFICATIONS

A full set of plans and specifications is available for inspection without charge at the Public Works Department of the Agency. Bids will only be accepted from bidders listed on the Agency's Plan Holders List. Complete sets of said documents may be purchased at a non-refundable cost of $35.00 per set and are obtainable from the Public Works Department of the Agency, 16600 Civic Center Drive, Bellflower, California, 90706, telephone number (562) 804-1424, extension 2259. Plans and Specifications can be mailed for an additional non-refundable fee of $10.00 per set or call for express delivery rates.

WAGE RATES AND LABOR CODE REQUIREMENTS

Pursuant to Labor Code Section 1725.5, both you and your subcontractors must be registered with the Department of Industrial Relations in the manner prescribed by DIR. Labor Code Section 1725.5 applies to contractors and subcontractors either bidding on, listed in the bid proposal or engaging in the performance of any public work contract over $1,000.00. **Please provide confirmation of registration for you and each of your subcontractors as part of your bid submittal.**

The contractor and all subcontractors shall be required to adhere to the general prevailing rate of per diem wages as determined and published by the State Director of the Department of Industrial Relations, pursuant to Part 7, Chapter 1, Article 2, Sections 1770, 1773 and 1773.1 of the California Labor Code. Copies of these rates and the latest revisions thereto are to be posted at the job site and will be on file in the Public Works Department of the Agency and are available for review upon request.

Attention is directed to the provisions of Sections 1774, 1775, 1776, 1777.5 and 1777.6 of the State Labor Code. Sections 1774 and 1775 require the contractor and all subcontractors to pay not less than the prevailing wage rates to all workmen employed in the execution of the contract and specify forfeitures and penalties for failure to do so. The minimum wages to be paid are those determined by the State Director of the Department of Industrial Relations. Section 1776 requires the contractor and all subcontractors to keep accurate payroll records, specifies the contents thereof, their inspection and duplication procedures, and certain notices required of the contractor pertaining to their location.

CITY OF BELLFLOWER

PARKING DISTRICT NO. 1 IMPROVEMENTS
FROM BELMONT STREET TO LAUREL STREET

SPECIFICATIONS NO. 15/16-02

INSTRUCTIONS TO BIDDERS

BID FORMS

Bids shall be submitted in writing on the Bid Forms provided by the Agency. All information requested therein must be clearly and legibly set forth in the manner and form indicated. All Addenda shall be acknowledged in the proposal. Bids will only be accepted from bidders listed on the Agency's Plan Holders List.

BID SHEET

Bidders shall give unit prices for each and all of the items set forth. No aggregate bids will be considered. The bidder shall set forth for each item of work, in clearly legible figures, a unit item price and a total for the item in the respective spaces provided for this purpose. The quantities listed in the Bid sheets are supplied to give an indication of the general scope of work, but the accuracy of figures is not guaranteed and the bidder shall make his/her own estimates from the drawings. In case of a variation between the unit price and the totals shown by the bidder, the unit price will be considered to be the bid.

BID GUARANTEE (BID BOND)

Bids shall be accompanied by a bid guarantee consisting of a certified check or bid bond payable to the Agency in the minimum amount of ten percent (10%) of the total amount bid. Any proposal not accompanied by such a guarantee will not be considered. If a bidder to whom a notice to award contract is issued fails or refuses to execute the contract documents or furnish the required insurance policies and bonds as set forth in those documents, then the bid guarantee may be forfeited to the Agency. The bid guarantees submitted by all bidders will be held until the successful bidder has properly executed all contract documents and furnished the required insurance policies and bonds.

NON COLLUSION DECLARATION

Each bidder shall declare (i) the only persons or parties interested in the bid as principals are those named therein, (ii) no officer, agent or employee of the Agency is personally interested, directly or indirectly, in the bid, (iii) the bid is made without connection to any other individual, firm or corporation making a bid for the same work and (iv) the bid is in all respects fair and without collusion or fraud. The Non Collusion Declaration shall be executed and submitted with the bid.

DELIVERY OF BID

Bids may be mailed or delivered by messenger. However, it is the bidder's responsibility alone to ensure delivery of the bid to the Office of the City Clerk prior to the bid opening hour stipulated in the "Notice Inviting Sealed Bids." Late bids will not be considered. Bids shall be enclosed in a sealed envelope plainly marked on the outside, **"SEALED BID FOR THE PARKING DISTRICT NO. 1 IMPROVEMENTS FROM BELMONT STREET TO LAUREL STREET – SPECIFICATIONS NO. 15/16-02 - DO NOT OPEN WITH REGULAR MAIL."**

WITHDRAWAL OF BIDS

A bid may be withdrawn by a written request signed by the bidder. Such requests must be delivered to the AGENCY's designated official prior to the bid opening hour stipulated in the "Notice Inviting Sealed Bids." The withdrawal of a bid will not prejudice the right of the bidder to submit a new bid, providing there is time to do so. Bids may not be withdrawn after said hour without forfeiture of the bid guarantee, unless agreed to otherwise by the Agency.

IRREGULAR/NON-RESPONSIVE BIDS

Unauthorized conditions, limitations, or provisions attached to a bid will render it irregular or non-responsive and may cause its rejection. The completed bid forms shall be without inter-lineation, alterations or erasures. Alternative bids will not be considered unless specifically requested. No oral, telegraphic or telephonic bid, modification or withdrawal will be considered.

TAXES

No mention shall be made in the bid of Sales Tax, Use Tax or any other tax, as all amounts bid will be deemed and held to include any such taxes which may be applicable.

DISQUALIFICATION OF BIDDERS

In the event any bidder acting as a prime contractor has an interest in more than one bid, all such bids will be rejected and the bidder will be disqualified. This restriction does not apply to subcontractors or suppliers who may submit quotations to more than one bidder. No contract will be executed unless the bidder is licensed in accordance with the provisions of the State Business and Professions Code and with the license required for the work.

LEGAL RESPONSIBILITIES

All bids must be submitted, filed, made and executed in accordance with State and Federal laws relating to bids for contracts of this nature whether the same are expressly referred to herein or not. Any Bidder submitting a bid shall by such action thereby agree to each and all of the terms, conditions, provisions and requirements set forth, contemplated and referred to in the Plans, Specifications, and Contract Documents and to full compliance therewith.

INTERPRETATION OF SPECIFICATIONS AND DOCUMENTS

If any person contemplates submission of a bid for the proposed contract and is in doubt as to the true meaning of any part of the specifications or other proposed contract documents, or find apparent discrepancies in, or apparent omissions from the specifications, then he/she may submit to the Engineer of the Agency a written request for an interpretation or correction thereof, which must be received by the Engineer at least seven (7) days prior to the date of receipt of bids. No request shall be taken within the six (6) days prior to bid opening. The person submitting the request will be responsible for its prompt delivery. Any interpretation or correction of the proposed documents shall be made only by addendum duly issued and copy of such addendum will be mailed, faxed or delivered to each person receiving a set of such documents. Interpretations, corrections or changes of the Bid Documents made in any other manner will not be binding and bidders shall not rely upon such interpretations, corrections and changes. The Engineer will not be responsible for any other explanation or interpretations of the proposed documents.

ADDENDA OR BULLETINS

The Engineer may, without Board approval, issue addenda to the Contract Documents during the period of advertising for bids, for the purpose of clarifying or correcting Specifications, Plans or Bid; provided that any such addenda do not substantially change the original scope and intent of the project. The effect of all addenda to the Contract Documents shall be considered in the bid and said addenda shall be acknowledged in the bid. Before submitting a bid, each bidder shall be responsible to be fully informed as to whether or not any addenda have been issued. Purchasers of Contract Documents will be furnished copies of such addenda by fax, certified mail or personal delivery during the period of advertising and shall signify receipt of same in the "Acknowledgment of Addenda," page of the bid. Failure to cover in this bid any such addenda issued shall render his bid irregular and shall result in its rejection by the Agency.

AWARD OF CONTRACT

Following a review of the bids, the Agency shall determine whether to award the contract or to reject any or all bids. The Award of Contract, if made, will be to the lowest responsive and responsible Bidder as determined solely by the Agency on the basis of the Bid submitted and the unit prices of the base bid, exclusive of additive alternates and other criteria as contained in the Plans, Specifications and Contract Documents. The Agency reserves the right to reject any or all bids, to accept any bid or portion thereof, to waive any irregularity, and to take the bids under advisement for the period of time stated in the, "Notice Inviting Sealed Bids," all as may be required to provide for the best interests of the Agency. In no event will an award be made until all necessary investigations are made as to the responsibility and qualifications of the Bidder to whom the award is contemplated.

No Bidder may withdraw a bid for a period of forty-five (45) days after the time set for opening thereof.

LABOR CODE

Pursuant to the provisions of Sections 1770-1773 of the Labor Code of the State of California, the Agency has obtained from the State Director of the Department of Industrial Relations the general provisions rate of per diem wages and the general prevailing rate for holiday and overtime work in this locality for each craft, classification or type of workman anticipated to be needed to execute the contract. These rates are on file with the Public Works Department and shall be posted at the job site. Copies will be made available to any interested party on request. It shall be the responsibility of the bidder awarded the bid to comply with all applicable sections of the Labor Code. It is the bidder's responsibility to immediately inform the City of each classification used by bidder that is not posted for purposes of prevailing wage requirements.

Original Certified Payroll Records for the selected bidder and its subcontractors shall be submitted to the Agency on approved forms by the tenth day of each month. Progress payments may be withheld pending receipt of any outstanding records. The Agency may conduct interviews with workers to verify compliance with applicable labor laws and wage requirements. Suspected irregularities and discrepancies may be reported to the appropriate agencies for review and enforcement.

Travel and subsistence payments to each worker needed to execute the work shall be made as such travel and subsistence payments are defined in the applicable collective bargaining agreements filed in accordance with Section 1773.8 of the Labor Code. The selected bidder shall comply with the provisions of Section 1774 of the Labor Code. Failure to comply with the subject section will subject the selected bidder to penalty and forfeiture provisions of Section 1775 of the Labor Code. The Agency will not recognize any claim for additional compensation because of the payment by the selected bidder of any wage rate in excess of the prevailing wage rate set forth in the contract. The possibility of wage increases is one of the elements to be considered by the selected bidder in determining his bid and will not under any circumstances be considered as the basis of a claim against the Agency on the contract.

The selected bidder and each of its subcontractors shall comply with Section 1777.6 of the Labor Code, which stipulates that it shall be unlawful to refuse to accept otherwise qualified employees as registered apprentices solely on the grounds of race, religious creed, color, national origin, ancestry, sex or age, except as provided in Section 3077, of such employee.

WORKER'S COMPENSATION CERTIFICATE

Section 3700 of the State Labor Code requires every employer shall secure the payment compensation by either being insured against liability to pay compensation with one or more insurers or by securing a certificate of consent to self-insure from the State Director of Industrial Relations. In accordance with this section and with Section 1861 of the State Labor Code, the selected bidder shall sign a Compensation Insurance Certificate which is included with the Agreement and submit same to Agency along with the other required Contract Documents, prior to performing any work. Reimbursement for this requirement shall be considered as included in the various items of work.

CLAYTON ACT AND CARTWRIGHT ACT

Section 4552 of the State Government Code specifies that in executing a public works contract with the Agency to supply goods, services or materials, the selected bidder or its subcontractor offers and agrees to assign to the Agency all rights, title and interest in and to all causes of action it may have under Section 4 of the Clayton Act (15 U.S.C. Sec. 15) or under the Cartwright Act (Chapter 2 commencing with Sec. 16700) of Part 2 of Division 7 of the Business and Professions Code, arising from purchase of goods, services or materials pursuant to the contract or subcontract. This assignment shall become effective when the Agency tenders final payment to the selected bidder without further acknowledgement by the parties.

SUBLETTING AND SUBCONTRACTING

Pursuant to the Subletting and Subcontracting Fair Practices Act (commencing with Section 4100 of the Public Contract Code), bidders are required to list in their bid the name and location of place of business of each Subcontractor who will perform work or labor or render services in or about the construction of the work or improvement or a subcontractor who specially fabricates and installs a portion of the work or improvement according to detailed drawings contained in the Plans and Specifications in excess of ½ of 1% of this selected bidder's total bid or $10,000, whichever is greater. Any other information required by the City pertaining to subcontractors may be submitted with the bid, or up to twenty-four (24) hours after the deadline established in the Notice Inviting Sealed Bids. Failure to list a subcontractor for a portion of the work means the selected bidder will do that portion of the work. It is the Agency's intent for the Subletting and Subcontracting Fair Practices Act to apply to all phases of the work.

Substituting a subcontractor in place of a subcontractor listed in the original bid without Agency approval or subcontracting work to which no subcontractor was designated in the original bid (and was required to be designated) or other subcontracting violations, may at the Agency's discretion, result in cancellation of the contract or a financial penalty.

The selected bidder shall perform with its own organization, contract work amounting to at least 50% of the contract price (see Sec. 2-3.1 General – Subcontracts). Failure to meet this requirement is grounds for rejection of the bid or cancellation of the contract. The Agency reserves the right to waive the 50% requirement if it deems it to be in the best interests of the Agency.

SUBSTITUTION OF SECURITIES

In accordance with the State of California Public Contract Code, Section 22300, the selected bidder may substitute securities for any monies withheld by the Agency to ensure performance under the contract. At the request and expense of the selected bidder, securities equivalent to the amount withheld shall be deposited with the Agency, or with a State or Federally chartered bank as the escrow agent, who shall pay such monies to the Contractor upon notification by Agency of Contractor's satisfactory completion of the contract. The type of securities deposited, the method of release and separate agreement for such substitution shall be approved by the City Attorney's office.

CONSTRUCTION CLAIMS/WAIVER OF CLAIMS

Section 20104 et seq. of the California Public Contract Code prescribes a process of utilizing informal conferences, non-binding judicially supervised mediation and judicial arbitration to resolve disputes on construction claims of $375,000 or less. The Agency has also adopted additional requirements and limitations regarding claims. (See the appropriate sections in the Special Provisions and General Specifications.)

At the completion of the project the selected bidder shall execute and the Agency shall approve a, "Final Closeout Agreement and Release of All Claims," concurrently with the final acceptance of the project and the filing of the Notice of Completion. The, "Final Closeout Agreement and Release of All Claims," shall be based on the final contract amount minus any damages.

BIDDER'S NAME _____

CITY OF BELLFLOWER

PARKING DISTRICT NO. 1 IMPROVEMENTS
FROM BELMONT STREET TO LAUREL STREET

SPECIFICATIONS NO. 15/16-02

BID

TO CITY OF BELLFLOWER as Agency:

In accordance with Agency's, "Notice Inviting Sealed Bids," the undersigned Bidder hereby proposes to furnish all materials, equipment, tools, labor and incidentals required for the above stated project as set forth in the Specifications and Contract Documents therefore, and to perform all work in the manner and time prescribed therein.

Bidder declares this bid is based upon careful examination of the work site, Plans, Specifications, Instructions to Bidders and Contract Documents. If this bid is accepted for award, then the Bidder agrees to enter into a contract with Agency at the unit and/or lump sum prices set forth in the following Bid Sheet. Bidder understands that failure to execute the Contract Documents and furnish the required insurance policies and bonds in the manner and time prescribed shall be considered breach of contract and may result in the rejection of the bid and forfeiture to Agency of the Bid Bond accompanying this bid.

Bidder understands a bid is required for the entire work, the estimated quantities set forth in the Bid Sheet are solely for the purpose of project administration and comparison of bids and final compensation under the Contract Documents will be based upon the actual quantities of work satisfactorily completed. It is agreed the unit and lump sum prices bid include all appurtenant expenses, taxes, royalties and fees. In the case of discrepancies in the amounts bid, unit prices shall govern over extended amounts and the lump sum total shall govern over the subtotals.

Bidder agrees and acknowledges he/she is aware of the provisions of Section 3700 of the Labor Code which requires every employer to be insured against liability for workman's compensation or to undertake self-insurance in accordance with the provisions of that code and that the Bidder will comply with such provisions of that code before commencing the performance of this Contract if awarded to it.

Bidder certifies in all previous contracts or subcontracts, all reports which may have been due under the requirements of any agency, State or Federal equal employment opportunity orders have been satisfactorily filed and that no such reports are currently outstanding.

Bidder declares in the Non Collusion Declaration included herein (i) the only persons or parties interested in this bid as principals are those named herein, (ii) that no officer, agent or employee of the Agency is personally interested, directly or indirectly, in this bid, (iii) that this bid is made without connection to any other individual, firm or corporation making a bid for the same work and (iv) this bid is in all respects fair and without collusion or fraud.

Bidder certifies affirmative action has been taken to seek out and consider disadvantaged business enterprises for those portions of the work to be subcontracted and that such affirmative actions have been carefully documented, said documentation is open to inspection and said affirmative action will remain in effect for the life of any contract awarded hereunder. Furthermore, Bidder certifies affirmative action will be taken to meet all equal employment opportunity requirements of the Contract Documents.

Bidder understands no bid will be accepted from a Bidder who has not been licensed in accordance with the provisions of Chapter 9, Division III of the Business and Professions Code of the State of California at the time the bid is submitted. Bidder has also received Section 7028.15(e) of the Business and Professions Code.

BIDDER'S NAME _____

BIDDER'S ADDRESS _____

PHONE (_____) _____

Subscribed and sworn to before me
this _____ day of _____, 20__.

_____
(Signature of Notary Public)

(SEAL)

BY: _____
(Print Name of Owner or President of Corporation/Company)

_____
(Signature)

_____
(Title)

_____
(Date)

_____
(Signature of Secretary of Corporation/Company)

BIDDER'S INFORMATION

Bidder certifies under penalty of perjury under the laws of the State of California that the following information is true and correct:

Name of Individual Contractor, Company or Corporation: _____

Business Address: _____

Phone: (_____) _____ Email: _____

California State Contractor's License No. and Class: _____

Original Date Issued: _____ Expiration Date: _____

Department of Industrial Relations (DIR) Registration No. _____

The following are the names, titles, addresses and phone numbers of all individuals, firm members, partners, joint ventures and company or corporate officers having a principal interest in this bid:

Name	Title	Address	Telephone

Corporation organized under the laws of the State of _____

The dates of any voluntary or involuntary bankruptcy judgments against any principal having an interest in this bid are as follows:

_____

_____

_____

All current and prior D.B.A.'s, aliases and fictitious business names for any principal having an interest in this bid are as follows:

_____

_____

_____

For all arbitrations, lawsuits, settlements or the like (in or out of court) you have been involved in with project owners (public agencies, private companies, etc.) in the past five (5) years:

1. Provide the names, addresses and telephone numbers of the parties.

_____

_____

2. Briefly summarize the parties' claims and defenses.

_____

_____

3. State the tribunal (i.e., Superior Court, American Arbitration Association, etc.) the matter number and the outcome.

_____

_____

4. Have you ever had a contract terminated by the owner/agency? If so, explain.

_____

_____

5. Have you ever failed to complete a project? If so, explain.

_____

_____

6. Have you ever been terminated for cause and then had it converted to a "termination of convenience"? If so, explain.

_____

_____

For <u>any</u> projects you have been involved with in the last five (5) years did you have any claims or actions:

		Circle One
1.	By you against the owner?	Yes / No
2.	By the owner against you?	Yes / No
3.	By any outside agency or individual for labor compliance (i.e. failure to pay prevailing wage, falsifying certified payrolls, etc.)	Yes / No
4.	By subcontractors (Stop Notices, etc.)	Yes / No
5.	Are any claims or actions unresolved or outstanding?	Yes / No

If yes to any of the above, please explain. (Attach additional sheets, if necessary.)

_____

_____

Failure of the bidder to provide <u>all</u> requested information in a complete and accurate manner shall be considered non-responsive and may result in rejection of the bid, forfeiture of the bid security and other penalties.

Subscribed and sworn to before me
this _____ day of _____, 20__.

_____
(Signature of Notary Public)

(SEAL)

By: _____
(Print Name of Owner or President of Corporation/Company)

_____
(Signature)

_____
(Title)

_____
(Date)

_____
(Signature of Secretary of Corporation/Company)

LIST OF SUBCONTRACTORS

The bidder shall set forth in the bid subcontractors on the subject project as required in the Public Contract Code, Sections 4100 – 4113. Substituting a subcontractor in place of subcontractor listed in the original bid without Agency approval or subcontracting work to which no subcontractor was designated in the original bid (and was required to be designated) or other subcontracting violations may, at the Agency's sole discretion, result in cancellation of the contract or a financial penalty. The Contractor shall perform with its own organizations contract work amounting to at least 50% of the contract price per Section 2-3.2 General – Subcontracting. Failure to meet this requirement may result in rejection of the bid or cancellation of the contract.

Bidder proposes to subcontract certain portions of the work and to procure materials and equipment from suppliers and vendors as follows:

Subcontractor Name _____

Address _____

Phone: (_____) _____ Email: _____

License No. and Class _____ DIR Registration No. _____

Dollar Amount and Percent of Total Contract _____

Specific Items of Work _____

Subcontractor Name _____

Address _____

Phone: (_____) _____ Email: _____

License No. and Class _____ DIR Registration No. _____

Dollar Amount and Percent of Total Contract _____

Specific Items of Work _____

Subcontractor Name _____

Address _____

Phone: (_____) _____ Email: _____

License No. and Class _____ DIR Registration No. _____

Dollar Amount and Percent of Total Contract _____

Specific Items of Work _____

REFERENCES

Failure of the bidder to provide all required information in a complete and accurate manner shall be considered non-responsive and may result in the rejection of the bid and forfeiture of the bid security. Failure to demonstrate adequate experience may result in rejection of the bid.

For all public agency projects you have worked on (or are currently working on) in the past three (3) years in excess of $75,000.00, provide the following required information:

1) Project Name/Number _____

Project Description _____

Approximate Construction Dates From ___/___/___ To ___/___/___

Agency Name _____

Address _____

Contact Person _____Telephone (_____) _____

Original Contract Amount $_____ Final Contract Amount $_____

If final amount is different from original, please explain (change orders, extra work, etc.)

_____

_____

Did you file any claims against the Agency? Did you the Agency file any claims against you/Contractor? If yes, briefly explain and indicate outcome of claims.

_____

_____

2) Project Name/Number _____

Project Description _____

Approximate Construction Dates From ___/___/___ To ___/___/___

Agency Name _____

Address _____

Contact Person _____Telephone (_____) _____

Original Contract Amount $_____ Final Contract Amount $_____

If final amount is different from original, please explain (change orders, extra work, etc.)

_____

_____

Did you file any claims against the Agency? Did the Agency file any claims against you/Contractor? If yes, briefly explain and indicate outcome of claims.

_____

_____

3) Project Name/Number _____

Project Description _____

Approximate Construction Dates From ___/___/___ To ___/___/___

Agency Name _____

Address _____

Contact Person _____Telephone (_____) _____

Original Contract Amount $_____ Final Contract Amount $_____

If final amount is different from original, please explain (change orders, extra work, etc.)

_____

_____

Did you file any claims against the Agency? Did the Agency file any claims against you/Contractor? If yes, briefly explain and indicate outcome of claims.

_____

_____

List any other projects (private, older than three (3) years, etc.) that may represent qualifying similar experience:

1) Project Name/Number _____

Project Description _____

Approximate Construction Dates From ___/___/___ To ___/___/___

Agency Name _____

Address _____

Contact Person _____Telephone (_____) _____

Original Contract Amount $_____ Final Contract Amount $_____

If final amount is different from original, please explain (change orders, extra work, etc.)

_____

_____

Did you file any claims against the Agency? Did the Agency file any claims against you/Contractor? If yes, briefly explain and indicate outcome of claims.

_____

_____

2) Project Name/Number _____

Project Description _____

Approximate Construction Dates From ___/___/___ To ___/___/___

Agency Name _____

Address _____

Contact Person _____Telephone (_____) _____

Original Contract Amount $_____ Final Contract Amount $_____

If final amount is different from original, please explain (change orders, extra work, etc.)

_____

_____

_____

Did you file any claims against the Agency? Did the Agency file any claims against you/Contractor? If yes, briefly explain and indicate outcome of claims.

_____

_____

3) Project Name/Number _____

Project Description _____

Approximate Construction Dates From ___/___/___ To ___/___/___

Agency Name _____

Address _____

Contact Person _____Telephone (_____) _____

Original Contract Amount $_____ Final Contract Amount $_____

If final amount is different from original, please explain (change orders, extra work, etc.)

_____

_____

Did you file any claims against the Agency? Did the Agency file any claims against you/Contractor? If yes, briefly explain and indicate outcome of claims.

_____

_____

DESIGNATION OF SURETIES

The following are the names, addresses and phone numbers for all brokers and sureties from whom Bidder intends to procure insurance and bonds (list by insurance/bond type):

_____

BIDDER'S NAME: _____

CITY OF BELLFLOWER

PARKING DISTRICT NO. 1 IMPROVEMENTS
FROM BELMONT STREET TO LAUREL STREET

SPECIFICATIONS NO. 15/16-02

PROJECT BID SHEET

Bids will only be accepted from bidders listed on the Agency's Plan Holders List. Each bidder (the "Bidder") shall complete this Project Bid Sheet for use only by the City for comparison of bids and compensation to the Bidder for this project. The estimated quantities and itemized descriptions listed in the Project Bid Sheet are supplied to give an indication of the general size of the work. The accuracy of the estimated quantities is not guaranteed. Unit prices are intended to be the basis for additions, deletions or substitutions to the work, if required. Lump sum prices and/or quantities shall be considered all inclusive and shall not be considered for price and/or quantity adjustment. The work to be performed shall include, but not be limited to, the items described. The bid shall include the furnishing of labor, services, tools, equipment, materials, appurtenances and incidentals necessary to complete the PARKING DISTRICT NO. 1 IMPROVEMENTS FROM BELMONT STREET TO LAUREL STREET per specifications. The Bidder shall provide a separate price (*in figures*) for the following:

Item No.	Description	Estimated Quantity	Unit Price	Total Price
1	Mobilization / De-Mobilization (may not exceed 5% of construction cost)	1 LS		
2	Traffic Control	1 LS		
3	Provide and Install Electrical Service Complete	1 LS		
4	Provide and Install Conduit with Conductors and Pullboxes Complete	1 LS		
5	Install Agency Provided Decorative Light Standards – Parking Lot (OFCI)	6 EA		
6	Install Agency Provided Decorative Light Standards – Pedestrian (OFCI)	2 EA		
7	Maintenance of Temporary and Existing Electrical System	1 LS		
8	Unclassified Excavation	44,630 SF		
9	Fine Grade Complete	44,630 SF		
10	Construct 3" Asphalt Concrete Over 4" Crushed Miscellaneous Base Over	44,630 SF		

	Compacted Native Material			
11	Adjust Water Meters to Grade	7 EA		
12	Adjust Manhole to Grade	1 EA		
13	Adjust SCE Vault to Grade	1 EA		
14	Provide and Install Concrete Wheel Stops Complete	2 EA		
15	Remove and Dispose Existing PCC Disabled Access Ramp Complete and Construct New Disabled Access Ramp per APWA Standard Plan No. 11-5, Case 'A' Type 1 Complete.	1 EA		
16	Remove and Dispose Existing PCC Disabled Access Ramp Complete and Construct New Disabled Access Ramp per APWA Standard Plan No. 11-5, Case 'D' Type 2 Complete	3 EA		
17	Remove and Dispose Two Existing PCC Alley Intersections Complete and Construct Two New Alley Intersections Complete per APWA Standard Plan No. 130-2 Modified as Shown on Plan Sheet 1 of 1.	918 SF		
18	Remove and Dispose of Existing Tree and Soil Complete. Construct 4" PCC pavement, Color to Match Existing	1 EA		
19	Remove and Dispose of Landscape Planter Complete Including Maintaining the Existing Irrigation System	302 SF		
20	Construct Variable Height PCC Curb Only Complete	16 LF		
21	Construct 4" PCC Sidewalk Complete. Match Existing Color Sidewalk.	302 SF		
22	Install Pavement Striping, Markings, Markers (Paint) and Signs Complete (By Others)	1 LS		
23	Protect Existing Irrigation System In Place Complete.	1 LS		
24	Remove and Re-install Existing PCC Wheel Stops Complete	1 LS		
25	Remove and Dispose Existing PCC Colored Sidewalk Complete and Construct New PCC Sidewalk, Match Existing Color	380 SF		

TOTAL BID PRICE IN FIGURES $ _____

TOTAL BID PRICE IN WORDS

_____

The Bidder shall note if the contract is awarded, it will be based on the lowest properly submitted bid provided that the Bidder has the proper qualifications and has met all requirements. The City reserves the right to reject any or all bids.

Attached hereto in cash, a certified check, a cashier's check or a bidder's bond in the amount of ten percent (10%) of the amount bid, which is agreed shall be retained as liquidated damages by the City if the undersigned fails or refuses to execute the agreement and furnish the required bonds and certificates of insurance within the time provided.

It is understood:

1. The undersigned has carefully examined all Contract Documents which will form a part of the Contract including the following: Notice Inviting Bids, Instructions to Bidders, Bid, Agreement, General Specifications, Special Provisions, Technical Specifications, Plans (if any) and Addenda.

2. The undersigned has carefully examined and fully understands all the limitations, requirements and possible consequences in the specific sections related to subcontracting, certified payroll records, claims, disclosures of past experience, payment, liquidated damages and waiver of claims.

3. The City does not warranty the completeness or accuracy of the plans and specifications and that submission of a bid is sufficient evidence that the undersigned has investigated the site of the work, is satisfied as to the nature and location of the work, and is fully informed as to all conditions and matters which can in any way affect the work or the cost thereof.

4. The undersigned fully understands the scope of work and has cleared carefully all words and figures inserted into the Bid and further understands the City will be in no way responsible for any errors or omissions in the preparation of the Bid.

5. The undersigned agrees, acknowledges and is aware of the provisions of Section 3700 of the Labor Code which requires every employee to be insured against liability for worker's compensation or to undertake self-insurance in accordance with the provisions before commencing the performance of the Contract it is awarded to the undersigned.

6. The undersigned agrees, acknowledges and is aware of the provisions of Section 1725.5 of the Labor Code which requires the contractor and all of their subcontractors to be registered with the Department of Industrial Relations (DIR) in the manner prescribed by DIR at the time of bid.

7. The undersigned will begin work after Notice to Proceed has been given, as herein specified; will meet all requirements in regard to bonds and insurance; and will complete said work within the time specified in the Instructions to Bidders.

8. The undersigned hereby certifies this Bid is genuine and not a sham or collusive, or made in the interest or in behalf of a person not herein named and the undersigned has not directly or indirectly induced or solicited any other bidder to put in a sham bid or any other person, firm or corporation to refrain from bidding. The undersigned has not in any manner sought by collusion to secure any advantage over any other Bidder.

9. The undersigned will accept an award and enter into a Contract for all work scheduled herein on which he submitted this bid. The awards for such work are to be entirely at the discretion of the City after evaluation of the bids as submitted.

10. The undersigned agrees the Agency shall, unless otherwise waived by the Agency, recover or retain as liquidated damages an amount equal to the ten percent (10%) of the total amount of the award made, all in accordance with the foregoing stipulations, in the event the undersigned fails to execute a Contract and furnish the required bonds and insurance therefore within the time provided.

11. Submission of a bid will be deemed a binding offer to enter into the attached Contract on the terms contained therein for 45 days from the bid opening.

12. If awarded the Contract, Contractor agrees to begin and to complete the work per specifications. Contractor further agrees to execute and return the Contract Documents, bonds and insurance certificates within ten (10) working days after the date of the Notice to Award. This is a valid and binding bid to do all the work herein described.

I hereby certify that the enclosed bid present a balanced bid and therefore each line item bears its proportionate share of profit.

Respectfully submitted,

_____	_____
Contractor's Business Name	By
_____	_____
Business Address	Title
_____	_____
City State Zip	Date
_____	
Business Telephone Number	

ACKNOWLEDGMENT OF ADDENDA

The Bidder shall signify receipt of all Addenda here, if any:

ADDENDUM NO.	DATE RECEIVED	SIGNATURE

CITY OF BELLFLOWER

PARKING DISTRICT NO. 1 IMPROVEMENTS
FROM BELMONT STREET TO LAUREL STREET

SPECIFICATIONS NO. 15/16-02

BID BOND

KNOW ALL MEN BY THESE PRESENTS that _____
_____ as Bidder, and
_____ as
Surety, are held and firmly bound unto the **City of Bellflower**, as Agency, in the penal sum of ten percent (10%) of the total amount bid by Bidder to Agency for the above stated project, for the payment of which sum, Bidder and Surety agree to be bound, jointly and severally, firmly by these presents.

THE CONDITIONS OF THIS OBLIGATION ARE SUCH that, whereas Bidder is about to submit a bid to Agency for the above stated project, if said bid is rejected, or if said bid is accepted and a contract is awarded and entered into by Bidder and Bidder files the required Faithful Performance and Labor and Material Bonds in the manner and time specified, then this obligation shall be null and void. Otherwise it shall remain in full force and effect in favor of Agency.

In the event suit is brought upon this bond by Agency and judgment is recovered, the Surety shall pay all costs incurred by the Agency in such suit, including reasonable attorney's fee to be fixed by the Court.

WITNESS our hands this _____ day of _____, 20__.

Subscribed and sworn to before me
this _____ day of _____, 20__.

By: _____
(Print Name of Owner or President of Corporation/Company)

_____
(Signature of Notary Public)

_____
(Signature)

(SEAL)

_____
(Title)

_____
(Date)

BID BOND

Subscribed and sworn to before me
this _____ day of _____, 20__.

_____
Signature of Notary Public

_____
(Print Surety's Name)

_____
(Mailing Address)

(SEAL)

By: _____
(Print Name)

_____
(Signature)

_____
(Title)

NOTE: SIGNATURES OF CORPORATE AND SURETY OFFICIALS MUST BE NOTARIZED.

(SEAL)

BIDDER'S NAME _____

NON COLLUSION DECLARATION TO BE EXECUTED BY BIDDER AND SUBMITTED WITH BID

The undersigned declares:

I am the _____ of _____, the party making the foregoing bid.

The bid is not made in the interest of, or on behalf of, any undisclosed person, partnership, company, association, organization, or corporation. The bid is genuine and not collusive or sham. The bidder has not directly or indirectly induced or solicited any other bidder to put in a false or sham bid. The bidder has not directly or indirectly colluded, conspired, connived, or agreed with any bidder or anyone else to put in a sham bid, or to refrain from bidding. The bidder has not in any manner, directly or indirectly, sought by agreement, communication, or conference with anyone to fix the bid price of the bidder or any other bidder, or to fix any overhead, profit, or cost element of the bid price, or of that of any other bidder. All statements contained in the bid are true. The bidder has not, directly or indirectly, submitted his or her bid price or any breakdown thereof, or the contents thereof, or divulged information or data relative thereto, to any corporation, partnership, company, association, organization, bid depository, or to any member or agent thereof, to effectuate a collusive or sham bid, and has not paid, and will not pay, any person or entity for such purpose.

Any person executing this declaration on behalf of a bidder that is a corporation, partnership, joint venture, limited liability company, limited liability partnership, or any other entity, hereby represents that he or she has full power to execute, and does execute, this declaration on behalf of the bidder.

I declare under penalty of perjury under the laws of the State of California that the foregoing is true and correct and that this declaration is executed on _____ [date], at _____ [city], _____ [state].

_____
Signature

CITY OF BELLFLOWER

PARKING DISTRICT NO. 1 IMPROVEMENTS
FROM BELMONT STREET TO LAUREL STREET

SPECIFICATIONS NO. 15/16-02

AGREEMENT

This Agreement is made and entered into by and between the City of Bellflower, a general law city ("City") and (INSERT NAME OF CONTRACTING ENTITY AND ITS STATUS, i.e., a partnership, a corporation, an individual, a joint venture, etc., e.g., "John Smith, an individual; "Smith Co., a California corporation") hereafter ("Contractor"). City and Contractor are sometimes referred to individually as the "Party" or collectively as the "Parties."

The parties hereto do agree as follows:

SECTION 1. Recitals. This Agreement is made and entered into with respect to the following facts:

A. City has heretofore established, a Specification No. 15/16-02, which consists of the PARKING DISTRICT NO. 1 IMPROVEMENTS FROM BELMONT STREET TO LAUREL STREET; and

B. In the time and manner prescribed by applicable law, City sought and received sealed bids for the purpose of constructing the Project; and

C. Bids were received, publicly opened and declared and examined by City staff; and

D. Contractor was determined to be the lowest responsive and responsible bidder and the City Council of City has heretofore accepted the Bid as submitted by Contractor and has directed that the City Manager execute this Agreement providing for the construction of the Project; and

E. The City Council of City has heretofore determined the public interest, convenience and necessity require the execution and implementation of this Agreement.

SECTION 2. Agreement. The documents which pertain to this Agreement are as follows:

A. Notice Inviting Bids, Specification No. 15/16-02, dated _____.

B. Specifications No. 15/16-02, dated _____.

C. Plans, dated _____.

D. Bid, dated _____, submitted by Contractor.

E. Department of Industrial Relations Rates and Latest Revisions (Prevailing Wage).

Copies of all of the above documents are on file in City's Public Works Department and are available for public inspection thereat. The above documents are hereby incorporated herein by this reference as if set forth in full.

Those documents and the remainder of this Agreement are complementary and what is called for in any one of the documents shall be as binding as if called for by all the documents. Any conflict between this Agreement and the above documents shall be resolved by reference to the provisions of this Agreement.

SECTION 3. Term. The term of this Agreement shall be until Contractor satisfactorily performs its obligations hereunder, including completing the work within a period of thirty (30) working days, commencing on the day the City Manager gives a written notice to proceed to the Contractor.

SECTION 4. Services to be Performed by Contractor. Contractor shall perform the work and services described in the Agreement (the "Services"). Contractor shall provide all labor and materials, tools, equipment and transportation required to perform the Services.

SECTION 5. Compensation. Contractor shall be compensated for the Services satisfactorily performed in accordance with the Bid and this Agreement.

Contractor shall provide City with invoices which shall describe the amounts of periodic compensation sought and describe the Services performed therefore. If the parties find themselves in dispute over the amounts due to Contractor, then the parties shall each designate a representative to meet and discuss, in good faith, the settlement and resolution of such dispute.

SECTION 6. Compliance With Law. Contractor shall comply with all applicable laws in performing the work and services pursuant to this Agreement.

SECTION 7. Warranties. The parties hereto do warrant to one another as follows:

A. Each party hereto had the legal authority to enter into this Agreement; and

B. Contractor currently holds and will continue to hold during the term of this Agreement, all necessary required licenses, permits and other approvals from all agencies having jurisdiction to perform the work and services hereunder, including, but not limited to, a business license issued by City; and

C. Contractor has or will employ the qualified, professional and technical personnel required to perform the Services; and

D. Contractor possesses appropriate required equipment to perform the Services; and

E. Contractor will perform all Services in the manner contemplated by this Agreement.

SECTION 8. Independent Contractor. It is expressly understood and agreed Contractor has been retained by City pursuant to this Agreement, as an independent contractor, as distinguished from an employee or agent of City, to perform the Services. Contractor acknowledges independent contractor status and acknowledges and agrees it has no authority to obligate or bind City in any way, for any purpose.

SECTION 9. Cooperation. Contractor agrees to work closely and cooperate fully with City staff assigned by the City Manager to work with Contractor and other agencies which may have jurisdiction as to the Services to be performed.

SECTION 10. Time of Performance: Liquidated Damages. Time is of the essence in performance of Services pursuant to this Agreement.

Failure of Contractor to complete the Services within the time allowed will result in damages being sustained by City. Such damages are, and will continue to be impracticable and extremely difficult to determine. For each consecutive calendar day in excess of the time specified for the completion of the Service, Contractor shall pay to City, or have withheld from monies due it, the sum of $1,000.00 per day.

Execution of this Agreement shall constitute agreement by City and Contractor $1,000.00 per day is the minimum value of the costs and actual damage caused by the failure of Contractor to complete the Services within the allotted time. Such sum is liquidated damages and shall not be construed as a penalty and may be deducted from payments due Contractor, including but not limited to the final payment, if such delay occurs.

SECTION 11. Indemnities.

A. By Contractor. Contractor ("Indemnifying Party") assumes the sole risk for all the Services to be performed by it pursuant to this Agreement. Contractor agrees and does hereby indemnify, defend, save and hold harmless City, its elected and appointed officials, officers, agents and employees (the "Indemnified Parties"):

1. From and against loss, damage, liability, claims, cost and expenses from damage, of any nature, including, but not limited to, bodily injury, occupational disease, death, personal injury, property damages, attorneys' fees and court costs (hereafter "Loss"), arising out of the performance of Services hereunder by Contractor; and

2. From and against any and all Loss, which may accrue to any and all persons, or business entities furnishing or supplying work, services, materials, equipment or supplies to Contractor in its performance pursuant to this Agreement; and

B. Third Party Action. In the event Contractor and City are sued by a third party for any Loss resulting from Contractors performance of this Agreement, Contractor shall not be relieved of its indemnity obligation to City by any settlement with any such third party unless that settlement includes a full release and dismissal of all claims by the third party against the Indemnified Parties.

C. Effect of Insurance. The existence of Commercial General Liability Insurance coverage as required pursuant to this Agreement shall not be deemed to satisfy the indemnity provisions of this Agreement.

D. Claims. Contractor shall give to City prompt and timely notice of any claim made or suit instituted arising out of Contractor's performance of Services pursuant to this Agreement.

SECTION 12. Required Insurance. Contractor shall provide insurance as set forth in Specifications No. 15/16-02, Special Provisions, Section 7-3.

SECTION 13. Assignment. Subcontractors.

A. Assignment. Contractor may not assign any right or obligation under this Agreement or any interest in this Agreement without the prior written consent of City. Any attempted or purported assignment without consent of City shall be null and void. The sale, assignment, transfer or other disposition of any of the issued and outstanding capital stock of Contractor, or of the interest of any general partner or joint venturer which shall result in changing the control of Contractor, shall be construed as an assignment of this Agreement. Control means fifty percent (50%) or more of the voting power, or twenty-five percent (25%) or more of the assets of the corporation, partnership or joint venture.

B. Subcontractors. Contractor may not employ any subcontractors other than those listed in the Bid Proposal, unless specifically authorized by law and City.

SECTION 14. Confidentiality. The information and records which result from the performance of the Services pursuant to this Agreement shall be kept confidential by Contractor unless the release of information is expressly authorized by law or City.

SECTION 15. City's Responsibilities. City shall furnish to Contractor such information it has, if requested in writing by Contractor, necessary for Contractor to complete the Services. City further agrees to provide all such materials in a timely manner so as not to cause delays in Contractor's performance hereunder.

SECTION 16. Administration. This Agreement will be administered for City by the City Manager or his/her designee who shall have the authority to act for City under this Agreement. Contractor shall designate a qualified person to act for Contractor with respect to such contract administration.

SECTION 17. Additional Work. Compensation.

A. Additional Work. No change in the Services described herein or additional work not contemplated by this Agreement shall be authorized or performed except upon the prior written direction and authorization of the City Manager.

B. Compensation. No compensation for any additional work will be paid to Contractor without prior City Council approval, except for work authorized by City Manager in emergency situations after declaration of a state or local emergency.

SECTION 18. Reimbursement for Expenses. Contractor shall not be reimbursed for any direct or indirect out-of-pocket costs incurred by Contractor in the performance of Services hereunder.

SECTION 19. Records. Contractor shall keep records and invoices in connection with its Services to be performed under this Agreement. Contractor shall maintain complete and accurate records with respect to the costs incurred under this Agreement. All such records shall be clearly identifiable. Contractor shall allow a representative of City during normal business hours to examine, audit and make transcripts or copies of such records. Contractor shall maintain and allow inspection of all work, data, documents, proceedings and activities related to this Agreement for a period of four (4) years after the date of final payment of compensation under this Agreement.

SECTION 20. Labor and Performance Bonds. Contractor shall furnish, concurrently with the execution of this Agreement, the following:

1. Performance Bond. A surety bond in an amount of one hundred percent (100%) of the Agreement bid price as security for the Faithful Performance of this Agreement; and

2. Labor and Materials Bond. A separate surety bond in an amount of one hundred percent (100%) of the Agreement bid price as security for the payment of all persons furnishing labor or materials in connection with the work under this Agreement. Both the Surety and Surety Form must be satisfactory to City.

Per Code of Civil Procedure, Section 995.311, any bond required on a Public Works Agreement shall be executed by an admitted surety insurer; and proof such surety is an admitted surety insurer shall be provided by Contractor at the time each bond is submitted.

The rights and remedies available to City pursuant to this paragraph shall be cumulative with all rights and remedies available to City pursuant to statutory and common law. All rights and remedies are expressly reserved and neither the furnishing of the Bonds, nor acceptance by City, shall constitute a waiver of any other rights or remedies available to City against Contractor.

SECTION 21. Payment of Compensation. City shall make payments to Contractor for those Services satisfactorily completed within thirty (30) days after receiving a complete monthly invoice for payment unless City disputes the amount Contractor claims is owed under this Agreement.

SECTION 22. Labor.

A. Contractor shall pay no less than the prevailing wage rates as required by Section 1771 and 1774 of the California Labor Code. Contractor shall conform with all applicable provisions set forth in the Labor Code and the Federal Fair Labor Standards Act.

B. Pursuant to the provisions of Section 1775 of the Labor Code, Contractor shall forfeit to the City, as a penalty, up to $50.00 for each calendar day, or portion thereof, for each laborer, worker or mechanic employed, paid less than the stipulated prevailing rates for any work done under this Agreement, by him or by any Subcontractor under him, in violation of the provisions of this Agreement, as determined pursuant to said Section.

C. Whenever Contractor has knowledge any actual or potential labor dispute is delaying or threatens to delay the timely performance of this Agreement, Contractor shall immediately give notice to City, including all relevant information.

D. Special Labor Code Provisions Applicable if There is No Governing Project Labor Agreement or Collective Bargaining Agreement.

1. **Application.** The Provisions of this subparagraph 22.D apply only if the Contractor has not executed a collective bargaining agreement covering the workers who will be employed to perform the Work.

2. **Declaration by Contractor.** Contractor has previously submitted as part of its post-award submittals a Declaration of Sufficiency of Funds. In executing this Agreement, Contractor warrants and represents all of the statements contained in its Declaration of Sufficiency of Funds, which are incorporated herein by this reference, remain true and correct as of the date of execution of this Agreement and may be relied upon by City in determining whether there appears to be sufficient funds in Contractor's bid to allow Contractor to comply with all Applicable Laws governing the labor or Services to be provided for under this Agreement. The truth and accuracy of the statements and acknowledgements contained in said Declaration and in this subparagraph 22.D constitute a material part of the consideration for the City's execution of this Agreement.

3. **Continuing Duty.** To the extent any of the information provided in the Declaration of Sufficiency of Funds submitted by Contractor relating to numbers of workers or independent contractors who will be employed or utilized for performance of the Services was or is based upon best estimates, rather than actual, figures or information, then the Contractor assumes the continuing duty to City to ascertain the actual figures and information requested in the Declaration and to provide such actual figures and information to City in writing once the actual figures and information become known.

SECTION 23. Nondiscrimination by Contractor. Contractor represents and agrees it does not and will not discriminate against any subcontractor, consultant, employee or applicant for employment because of race, religion, color, sex, handicap or national origin. Such nondiscrimination shall include, but not be limited to, the following: employment, upgrading, demotion, transfers, recruitment, recruitment advertising, layoff, termination, rates of pay or other forms of compensation and selection for training, including apprenticeship.

SECTION 24. Notices. Whenever notices are required to be given pursuant to the provisions of this Agreement, the same shall be in written form and shall be served upon the party to whom addressed by personal service as required in judicial proceedings or by deposit of the same in the custody of the United States Postal Service or its lawful successor in interest, postage prepaid, addressed to the Parties as follows:

CITY:

City of Bellflower
Attn: Len Gorecki, Director of Public Works
16600 Civic Center Drive
Bellflower, California 90706

CONTRACTOR:

_____
Attn:_____
_____
_____

Notices shall be deemed, for all purposes, to have been given on the date of personal service or three (3) consecutive calendar days following the deposit of the same in the United States mail.

SECTION 25. Binding Effect. The provisions of this Agreement shall be binding upon the Parties hereto and their respective successors in interest.

SECTION 26. Section Headings. The section headings contained in this Agreement are for convenience and identification only and shall not be deemed to limit or define the contents of the sections to which they relate.

SECTION 27. No Presumption re: Drafter. The Parties acknowledge and agree this Agreement has been accepted by the Parties and their attorneys and reflects their mutual agreement. No presumption for or against validity or as to any interpretation hereof, based upon the identity of the drafter shall be applicable in interpreting or enforcing this Agreement.

SECTION 28. Assistance of Counsel. Each party to this Agreement warrants to each other party, as follows:

1. Each party either had the assistance of counsel or had counsel available to it in the acceptance and execution of this Agreement and all related documents; and

2. Each party has lawfully authorized the execution of this Agreement.

SECTION 29. Severability. This Agreement shall not be deemed severable. If any provision or part hereof is judicially declared invalid, this Agreement shall be void and of no further effect.

SECTION 30. Modification and Amendment. This Agreement shall not be modified or amended except by written agreement of the Parties.

SECTION 31. Termination. In the event Contractor fails or refuses to timely perform any of the provisions of this Agreement in the manner required or if Contractor violates any provisions of this Agreement, then Contractor shall be deemed in default. If such default is not cured within a reasonable time as determined by City, to cure the default and Contractor fails to perform or give adequate assurance of due performance within the time set by City after Contractor receives notice of default from City, then City may terminate this Agreement forthwith.

SECTION 32. Waiver. A waiver by City of any breach of any term, covenant or condition contained herein shall not be deemed to be a waiver of any subsequent breach of the same or any other term, covenant or condition contained herein whether of the same or a different character.

SECTION 33. Integrated Agreement. This Agreement represents the full and complete understanding of every kind and nature whatsoever between the Parties. No verbal agreement or implied covenant shall be held to vary the provisions hereon. Any modification of this Agreement will be effective only by written execution signed by both City and Contractor.

SECTION 34. Effective Date. The effective date of this Agreement shall be the date it is signed on behalf of City.

IN WITNESS WHEREOF, the parties have caused this Agreement to be executed on the day and year first written above.

DATED: _____

CITY

By: _____
Jeffrey L. Stewart
City Manager

ATTEST:

_____
Mayra Ochiqui
City Clerk

DATED: _____

CONTRACTOR

By: _____
_____
Its _____

_____
State Contractor License Number

By: _____
_____
Its _____

Documents Incorporated by Reference

CITY OF BELLFLOWER

PARKING DISTRICT NO. 1 IMPROVEMENTS
FROM BELMONT STREET TO LAUREL STREET

SPECIFICATIONS NO. 15/16-02

FAITHFUL PERFORMANCE BOND

KNOW ALL MEN BY THESE PRESENTS that,_____ _____as Contractor, and Surety, are held and firmly bound unto the **City of Bellflower**, as Agency, in the penal sum of _____ dollars ($_____), which is one hundred percent (100%) of the total Agreement amount for the above stated project, for the payment of which sums, Contractor and Surety agree to be bound, jointly and severally, firmly by these presents.

THE CONDITIONS OF THIS OBLIGATION ARE SUCH that, whereas Contractor has been awarded and is about to enter into the annexed Agreement with Agency for the above stated project, if Contractor faithfully performs and fulfills all obligations under the Agreement (including but not limited to the obligations of the Agreement Documents incorporated therein) in the manner and time specified therein, then this obligation shall be null and void at the end of all warranty periods set forth in the Agreement, otherwise it shall remain in full force and effect in favor of Agency; provided that any alterations in the obligations or time for completion made pursuant to the terms of the Agreement shall not in any way release either Contractor or Surety, and notice of such alterations is hereby waived by Surety.

WITNESS our hands this _____ day of _____, 20__.

Subscribed and sworn to before me
this _____ day of _____, 20__.

_____
(Signature of Notary Public)

_____
(Print Name of Contractor, Company or Corporation)

By: _____
(President)

By: _____
(Secretary/Treasurer)

(SEAL)

(SEAL)

FAITHFUL PERFORMANCE BOND

Subscribed and sworn to before me
this _____ day of _____, 20__.

_____
(Print Surety's Name)

_____
(Signature of Notary Public)

_____
(Surety's Mailing Address)

By:_____
(Name)

(SEAL)

_____
(Title)

NOTE: SIGNATURES OF CORPORATE OFFICIALS AND SURETY MUST BE NOTARIZED, ATTACH JURAT.

CITY OF BELLFLOWER

PARKING DISTRICT NO. 1 IMPROVEMENTS
FROM BELMONT STREET TO LAUREL STREET

SPECIFICATIONS NO. 15/16-02

PAYMENT BOND

KNOW ALL MEN BY THESE PRESENTS that _____ _____as Contractor, and _____, as Surety, are held and firmly bound unto the **CITY OF BELLFLOWER**, as Agency, in the penal sum of _____ dollars ($_____), which is one hundred percent (100%) of the total Agreement amount for the above stated project, for the payment of which sum, Contractor and Surety agree to be bound, jointly and severally, firmly by these presents.

THE CONDITIONS OF THIS OBLIGATION ARE SUCH that, whereas Contractor has been awarded and is about to enter into the annexed Agreement with Agency for the above stated project, if Contractor or any subcontractor fails to pay for any labor or material of any kind used in the performance of the work to be done under said Agreement, or fails to submit amounts due under the State Unemployment Insurance Act with respect to said labor, Surety will pay for the same in an amount not exceeding the sum set forth above, which amount shall insure to be the benefit of all persons entitled to file claims under the State Civil Code; provided that any alterations in the work to be done, materials to be furnished, or time for completion made pursuant to the terms of the Agreement shall not in any way release either Contractor or Surety, and notice of said alterations is hereby waived by Surety.

WITNESS our hands this _____ day of _____, 20__.

Subscribed and sworn to before me
this _____ day of _____, 20__.

_____
(Signature of Notary Public)

_____
(Print Name of Contractor, Company or Corporation)

By: _____
(President)

By: _____
(Secretary/Treasurer)

(SEAL)

(SEAL)

PAYMENT BOND

Subscribed and sworn to before me
this _____ day of _____, 20__.

_____
(Print Surety's Name)

_____
(Signature of Notary Public)

_____
(Surety's Mailing Address)

By:_____
(Name)

(SEAL)

_____
(Title)

NOTE: SIGNATURES OF CORPORATE OFFICIALS AND SURETY MUST BE NOTARIZED, ATTACH JURAT.

WORKER'S COMPENSATION INSURANCE CERTIFICATE

Pursuant to Section 1861 of the State Labor Code Amended by Stats. 1979, (C.373, p1343), each Contractor to whom a public works agreement has been awarded shall sign the following certificate and shall submit same to the Agency prior to performing any work on the Agreement:

> "I am aware of the provisions of Section 3700 of the Labor Code which requires every employer to be insured against liability for worker's compensation or to undertake self-insurance in accordance with the provisions of that code, and I will comply with such provisions before commencing the performance of work of this contract."

_____
(Contractor)

By: _____
(Print Name)

_____
(Signature)

_____
(Title)

_____
(Date)

Section 3700 of the State Labor Code reads in pertinent part as follows:

> "Every employer except the state shall secure the payment of compensation in one or more of the following ways:
>
> (a) By being insured against liability to pay compensation by one or more insurers duly authorized to write compensation insurance in this state.
>
> (b) By securing from the Director of Industrial Relations a certificate of consent to self-insure either as an individual employers, or as one employer in a group of employers, which may be given upon furnishing proof satisfactory to the Director of Industrial Relations of ability to self-insure and to pay any compensation that may become due to his or her employees."

DECLARATION OF SUFFICIENCY OF FUNDS
(California Labor Code Section 2810)

I, the undersigned, an authorized representative of _____ (insert name of Bidder) ("Bidder") with authority to make the statements contained in this Declaration on behalf of Bidder, hereby declare the following:

1. The Bidder's employer identification number for state tax purposes is _____ (insert identification number).

2. The Bidder's workers' compensation insurance policy number is _____ (insert policy number) and the name, address, and telephone number of the insurance carrier providing said insurance is: _____ (insert information requested).

3. The following information is provided concerning any and all vehicles that are owned by the Bidder and that will be used for transportation in connection with any service provided for the performance of the Work that is subject of the Bidder's Bid to the District (insert information requested. Attach addition sheets, if needed):

Vehicle	Vehicle ID No.	Vehicle Liability Insurance Policy No. (of Policy covering vehicle)	Name, Address and Telephone No. of Vehicle Liability Insurance Carrier (issuing Policy covering vehicle)

4. The following is the address of any real property that will be used to house workers in connection with the performance of the Work that is subject of the Bidder's Bid to the District (insert information requested. If no such housing will be provided, enter "none"). _____.

5. The actual or estimated number of workers that will be employed to perform the Work of the Project that is the subject of the Bidder's Bid, the total amount of wages to be paid to said workers, and the date on which said wages will be paid are as follows (attach additional sheets, if needed):

Total Number of Workers	Total Amount of Wages	Dates for Payment of Wages

6. Check only one of the following boxes, as applicable:

☐ The statement of number of workers declared in Paragraph 5, above, is a statement of the actual number of workers that will be employed; or

☐ The actual number of workers requested in Paragraph 5, above, is unknown and therefore the statement of number of workers declared therein is based on the Bidder's best estimate available at the time of Bid, rather than the actual number of workers that will be employed.

7. The actual or estimated total number of persons and entities who will be utilized as independent contractors to perform the Work of the Project that is the subject of the Bidder's Bid (together with their known, current local, state, and federal contractor license identification numbers that each is required to have under local, state or federal laws or regulations are as follows (attach additional sheets, if needed):

List of Independent Contractors	Current, Local, State and Federal Contractor License Identification Number

8. Check only one of the following boxes, as applicable:

☐ The statement of number of independent contractors declared in Paragraph 7, above, is a statement of the actual number of independent contractors that will be utilized; or,

☐ The actual number of independent contractors requested in Paragraph 7, above, is unknown and therefore the statement of number of independent contractors declared therein is based on the Bidder's best estimate available at the time of Bid, rather than the actual number of independent contractors that will be utilized.

I, the undersigned, declare under penalty of perjury that the foregoing statements are within my personal knowledge and are true and correct. Executed on this _____ day of _____, in the year 20___.

_____

_____
Print Name

CITY OF BELLFLOWER

PARKING DISTRICT NO. 1 IMPROVEMENTS
FROM BELMONT STREET TO LAUREL STREET

SPECIFICATIONS NO. 15/16-02

GUARANTY

In accordance with the terms of the contract for the _____ _____ in the City of Bellflower (the "Contract") approved _____ between the City of Bellflower (the "Agency") and the undersigned (the "Contractor"), under which the Contractor shall complete work as described in the Contract Documents (as defined in the Contract), the following guarantee of said work is hereby made.

If any of the items installed pursuant to the Contract, prove defective or if the item, as a whole, proves defective, due to faulty workmanship, material furnished or methods of installation, or if the said item or any part thereof fails to operate properly, as planned, due to any of the above causes, all within one (1) year after date on which the work is accepted by the Agency, then the undersigned agrees the repairs shall be made and such materials as are necessary shall be furnished and installed within thirty (30) days after the receipt of demand from the Agency; provided, that if the Contract Documents require a longer guaranty period, then the longer period shall apply. In the event repairs are not made within thirty (30) days, the Agency shall have the unqualified option to make any needed repairs or replacements itself or by any other contractor. The Contractor agrees to reimburse the Agency, upon demand, of its expenses incurred in restoring said items to the condition contemplated in the Contract, including the cost of any equipment or materials replaced, or upon demand by the Agency, to replace any such equipment and repair said items completely without cost to the Agency so that they will operate successfully as originally contemplated.

Emergency repairs must necessarily be made by the Agency; therefore, when defective material or workmanship results in emergency repairs, the undersigned agrees to reimburse the Agency, upon demand, expenses incurred.

Each item will be deemed defective within the meaning of this guaranty in the event that item fails to operate as originally intended thereof and in accordance with the plans and specifications included in the Contract. The Faithful Performance Bond required for the Contract shall remain in full force and effect for the entire first year of the applicable guarantee period.

_____ _____
Date (Print Name of Contractor, Company or Corporation)

_____
Signature

CITY OF BELLFLOWER

PARKING DISTRICT NO. 1 IMPROVEMENTS
FROM BELMONT STREET TO LAUREL STREET

SPECIFICATIONS NO. 15/16-02

GENERAL SPECIFICATIONS

ADDENDA

The Engineer may, without Board approval, issue addenda to the contract documents during the period of advertising for bids, for the purpose of clarifying or correcting Specifications, Plans or Bid; provided that any such addenda do not substantially change the original scope and intent of the project. Purchasers of contract documents will be notified and furnished copies of such addenda, either by fax, certified mail or personal delivery, during the period of advertising and shall signify receipt of same in the appropriate location in the contract documents.

STANDARD SPECIFICATIONS

The Standard Specifications of the Agency are contained in the most recent edition of the Standard Specifications for Public Works Construction (Greenbook), including all supplements, as written and promulgated by the Joint Cooperative Committee of the Southern California Chapter of the American Public Works Association and the Southern California District of the Associated General Contractors of California. Copies of these Standard Specifications are available from the publisher, Building News, Incorporated, 1612 S. Clementine Street, Anaheim, California, 92802, Telephone: (714) 517-0970.

The Standard Specifications will control the general provisions, construction materials and construction methods for this contract except as amended by the Plans, these General Specifications and Special Provisions, Technical Specifications or other contract documents.

The section numbers of the following Special Provisions coincide with those of the said Standard Specifications. Only those sections requiring amendment or elaboration, or specifying options, are called out. In case of conflict between the Standard Specifications, General Specifications, Special Provisions, and the Technical Specifications, the Technical Specifications shall take precedence over and be used in lieu of such conflicting portions.

References in the General Specifications and Special Provisions to Standard Plans shall mean the latest edition of the Standard Plans for Public Works Construction, adopted by the Joint Cooperative Committee of Southern California Chapter of American Public Works Association, and Southern California Districts of Associated General Contractors of California, the California State Code Title 24, and State of California Building Code requirements, and where applicable, the State Department of

Transportation. For reference, copies of Applicable Standard Plans for this project may be contained in the Appendix of these Specifications.

Where the Plans and Specifications describe portions of the work in general terms, but not in complete detail, it is understood that the item is to be furnished and installed complete and in place, that only the best general practice is to prevail and that only materials and workmanship of the first quality are to be used. Unless otherwise specified, the Contractor shall furnish all labor, materials, tools, equipment and incidentals, and do all the work involved in executing the contract.

WAGE RATES AND LABOR CODE REQUIREMENTS

Wage Rates

The Contractor and all Subcontractors shall be required to adhere to the general prevailing rate of per diem wages as determined and published by the State Director of the Department of Industrial Relations, pursuant to Section 1770, 1773 and 1773.1 of the California Labor Code. Copies of these rates are attached herein and are on file with the Public Works Department and shall be posted at the job site. Copies are available for review upon request.

Attention is directed to the provisions of Sections 1774, 1775, 1776, 1777.5 and 1777.6 of the State Labor Code. Sections 1774 and 1775 required the Contractor and all Subcontractors to pay not less than the prevailing wage rates to all workmen employed in the execution of the contract and specify forfeitures and penalties for failure to do so. The minimum wages to be paid are those determined by the State Director of the Department of Industrial Relations. Section 1776 requires the Contractor and all Subcontractors to keep accurate payroll records, specifies the contents thereof, their inspection and duplication procedures and certain notices required of the Contractor pertaining to their location.

Apprentices

Section 1777.5 requires the Contractor or Subcontractor employing tradesmen in any apprenticeable occupation to apply to the Joint Apprenticeship Committee nearest the site of the public works project which administers the apprenticeship program in that trade for a certificate of approval. The certificate will also fix the ratio or apprentices to journeymen to be used in the performance of the contract.

The Contractor is required to make contributions to funds established for the administration of apprenticeship programs if he employs registered apprentices or journeymen in any apprentice able trade and if other Contractors on the public works site are making such contributions. Information relative to apprenticeship standards, contributions, wage schedules and other requirements may be obtained from the State Director of Industrial Relations or from the Division of Apprenticeship Standards.

Cooperation and Collateral Work

The Contractor is advised as to the possibility of other construction projects within the proposed construction zone by the City of Bellflower, other governing agencies or private enterprises. In the event of such projects, the Contractor shall coordinate with

the applicable parties as to the extent of any time required to complete their work and shall schedule his work and conduct his operations so as to permit access and time as required for the concurrent work. The Contractor shall immediately notify the Inspector in the event of a delay in scheduling caused solely by this construction work. Payment for the above, if any, shall be deemed as included in the items of work as shown on the bid sheet and no additional compensation will be allowed.

RESOLUTION OF CONSTRUCTION CLAIMS/LIMITATIONS FOR CLAIMS/WAIVER OF CLAIMS

Effective January 1, 1991 sections 20104 *et seq*. of the California Public Contract Code ("PCC") prescribed a process of utilizing informal conferences, non-binding judicially supervised mediation and judicial arbitration to resolve disputes on construction claims or $375,000 or less.

"Public work," has the same meaning as in Section 3100 and 3106 of the Civil Code… ." (PCC subsection 20104 (b) (1).)

"Claim," means a separate demand by the contractor for: A) a time extension, B) payment of money or damages arising from work done by or on behalf of the contractor pursuant to the contract for a public work and payment of which is not otherwise entitled to, or C) an amount the payment of which is disputed by the local agency. (PCC subsection 20401 (b) (2).)

The following requirements apply to all contracts entered into after January 1, 1991, and all claims to which this section applies: (All references are to PCC sections 20141.2 *et seq*.)

(a) The claim shall be in writing and include the documents necessary to substantiate the claim. Claims must be filed on or before the date of final payment. Nothing in this subdivision is intended to extend the time limit or supersede notice requirements otherwise provided by contract for the filing of claims.

(b) (1) For claims of less than fifty thousand dollars ($50,000), the local agency shall respond in writing to any written claim within 45 days of receipt of the claim, or may request, in writing, within 30 days of receipt of the claim, any additional documentation supporting the claim or relating to defenses or claims the local agency may have against the claimant.

(2) If additional information is thereafter required, it shall be requested and provided pursuant to this subdivision, upon mutual agreement of the local agency and the claimant.

(3) The local agency's written response to the claim, as further documented, shall be submitted to the claimant within 30 days after receipt of the further documentation, or within a period of time no greater than that taken by the claimant in producing the additional information or requested documentation, whichever is greater.

(c) (1) For claims over fifty thousand dollars ($50,000) and less than or equal to three hundred seventy-five thousand dollars ($375,000), the local agency shall respond on writing to all written claims within 60 days of receipt of the claim, or may request in writing, within 30 days of receipt of claim, any additional documentation supporting the claim or relating to defenses or claims the local agency may have against the claimant.

(2) If additional information is thereafter required, it shall be requested and provided pursuant to this subdivision, upon mutual agreement of the local agency and the claimant.

(3) The local agency's written response to the claim, as further documented, shall be submitted to the claimant within 30 days after the receipt of further documentation, or within a period of time no greater than that taken by the claimant in producing the additional information or requested documentation, whichever is greater.

(d) If the claimant disputes the local agency's written response, or the local agency fails to respond within the time prescribed, then the claimant may so notify the local agency, in writing, either within 15 days after receipt of the local agency's response or within 15 days of the local agency's failure to respond within the time prescribed, respectively, and demand an informal conference to meet and confer for settlement of the issues in dispute. Upon demand, the local agency shall schedule a meet and confer conference within 30 days for settlement of the dispute.

(e) If following the meet and confer conference the claim or any portion remains in dispute, then the claimant may file a claim pursuant to Chapter 1 (commencing with Section 900) and Chapter 2 (commencing with Section 910) of Part 3 of Division 3.6 of Title 1 of the Government Code. For purposes of those provisions, the running of the period of time within which a claim must be filed shall be tolled from the time the claimant submits his or her written claim pursuant to subdivision (a) until the time the claim is denied, including any period of time utilized by the meet and confer conference.

In accordance with PCC section 20104.4, the following procedures are established for all civil actions filed to resolve claims subject to this article.

(a) Within 60 days, but no earlier than 30 days, following the filing or responsive pleadings, the court shall submit the matter to non-binding mediation unless waived by mutual stipulation of both parties. The mediation process shall provide for the selection within 15 days by both parties of a disinterested third person as mediator, shall be commenced within 30 days of the submittal, and shall be concluded within 15 days after the commencement of the mediation unless a time requirement is extended upon a good cause showing to the court.

(b) (1) If the matter remains in dispute, the case shall be submitted to judicial arbitration pursuant to Chapter 2.5 (commencing with Section 1141.10 of Title 3 Part 3 of the Code of Civil Procedure), notwithstanding Section 1141.11 of that code. The Civil Discovery Act of 1986 (Article 3

(commencing with Section 2016) of Chapter 3 of Title 3 of Part 4 of the Code of Civil Procedure) shall apply to any proceeding brought under this subdivision consistent with the rules pertaining to judicial arbitration.

(2) In addition to Chapter 2.5 (commencing with Section 1141.10) of Title 3 Part 3 of the Code of Civil Procedure, (A) arbitrators shall, when possible, be experienced in construction law, and (B) any party appealing an arbitration award who does not obtain a more favorable judgment shall, in addition to payment of costs and fees under that chapter, also pay the attorney's fees on appeal of the other party.

In accordance with Section 20104.6 of the California Contract Code:

(a) No local agency shall fail to pay money as to any portion of a claim which is undisputed except as otherwise provided in the contract.

(b) In any suit filed under Section 20104.4, the local agency shall pay interest at the legal rate on any arbitration award or judgment. The interest shall begin to accrue on the date the suit is filed in a court of law.

(c) In addition to the above stated provisions regarding claims the following shall be incorporated into the claims process and shall apply to all Contractor claims.

1. The Contractor shall include the following Personal Certification on every claim:

   "I, _____, being the _____ (must be an officer) of _____ (General Contractor), declare under penalty of perjury under the laws of the State of California, and do personally certify and attest that: I have thoroughly reviewed the attached claim for additional compensation and/or extension of time, and know its contents, and said claim is made in good faith; the supporting data is truthful and accurate; that the amount requested accurately reflects the contract adjustment for which the Contractor believes the Owner is liable; and, further, that I am familiar with California Penal Section 12560, et seq., pertaining to false claims, and further know and understand that submission or certification of a false claim may lead to fines, imprisonment and/or other severe legal consequences."

   This shall be followed by a signature of the individual providing the personal certification.

2. The Contractor agrees that submission of a claim, properly certified, with all required supporting documentation and written rejection or denial of all or part of the claim by Owner, is a condition precedent to any action, proceeding, litigation, suit or demand for arbitration by Contractor.

3. Upon submitting a claim the Contractor shall immediately open all documents (books, contracts, logs, bid documents, etc.) for review and copying by the Agency and shall require the same of all subcontractors. For each day that the Contractor or subcontractor delays or fails to produce documents as requested by the Agency the Contractor shall be assessed liquidated damages of $1,000 per day.

4. A Delay Claim (a written demand by the Contractor seeking time or compensation, or both, for delays to the project) must include documents supporting the delay claim, including but not limited to, evidence of all facts supporting the alleged claim and the current schedule showing the impact of the event or occurrence on the critical path.

5. Contractor must give written notice of a delay claim within five (5) days of event or occurrence giving rise to the delay claim or Contractor waives its delay claim.

6. The Contractor's failure to give notice of changed conditions promptly upon their discovery and before they are disturbed shall constitute a waiver of all claims in connection therewith.

7. The Contractor shall have no basis for a delay claim unless the event or occurrence delays completion of project beyond the contractual completion date.

8. The Contractor shall have no basis for a delay claim unless the delay is to a critical activity while the activity is on the critical path.

9. The Agency may make changes to the work, or suspend the work and no matter how many changes, such changes or suspensions are within the contemplation of the parties and will not be a basis for compensable delay claim.

WAIVER OF ALL CLAIMS

At the completion of the project the Contractor shall execute and the Agency shall approve a, "Final Closeout Agreement and Release of all Claims," concurrently with the final acceptance of the project and the filing of the Notice of Completion.

The, "Final Closeout Agreement and Release of All Claims," shall be based on the final contract amount minus any damages.

The Agency, at its sole discretion, may insert a clause into the subject agreement limiting or restricting the Contractor and/or individuals from the company from bidding on any future projects with the Agency.

CITY OF BELLFLOWER

PARKING DISTRICT NO. 1 IMPROVEMENTS
FROM BELMONT STREET TO LAUREL STREET

SPECIFICATIONS NO. 15/16-02

SPECIAL PROVISIONS

These Special Provisions amend the General and Standard Specifications as indicated and take precedence over the General and Standard Specifications.

PART 1 – SPECIAL PROVISIONS

SECTION 1 – TERMS, DEFINITIONS, ABBREVIATIONS AND SYMBOLS

1-2 DEFINITIONS. (Applicable to the entire set of specifications)

Agency - City of Bellflower
Board - City Council of the City of Bellflower
Caltrans - California Department of Transportation
City - City of Bellflower
Attorney - Attorney for the City of Bellflower
County - County of Los Angeles
Engineer - Public Works Director of the City of Bellflower (or his/her Designee)
Federal - United States of America
Inspector - Inspector for the Agency (or his/her Designee)
State - State of California

SECTION 2 – SCOPE AND CONTROL OF THE WORK

2-1 AWARD AND EXECUTION OF CONTRACT

Within ten (10) working days after the date of the Notice to Award, the Contractor shall execute and return the following contract documents to the Agency:

* Signed Agreement
* Faithful Performance Bond
* Payment Bond
* Commercial General Liability Insurance Certificate
* Worker's Compensation Insurance Certificate
* Other insurances, if any, specified herein

Failure to comply with the above may result in annulment of the award and forfeiture of the Bid Guarantee. The Agreement shall not be considered binding upon the Agency until executed by the authorized Agency officials.

2-1 AWARD AND EXECUTION OF CONTRACT Continued

A corporation to which an award is made may be required before the Agreement is executed by the Agency to furnish evidence of its corporate existence, of its right to enter into contracts in the State of California and that the officers signing the contract and bonds for the corporation have the authority to do so.

2-2.1 SCOPE OF WORK

The work to be done consists of furnishing all labor, materials, methods and processes, implements, tools and machinery which is necessary and required for the PARKING DISTRICT NO. 1 IMPROVEMENTS FROM BELMONT STREET TO LAUREL STREET as noted below:

Parking lot shall be excavated and material disposed; sub-grade fine graded with weed killer applied and paved with 3” asphalt concrete over 4” CMB over compacted native material; portions of an existing landscape planter removed and disposed of complete; remove and replace existing alley intersections complete; PCC pedestrian paths constructed; disabled access ramps constructed; pavement markings and striping constructed; construct under sidewalk drain, drain pipe (1) complete; provide and install conduit and sweeps; conductor wire; electrical service; pull boxes, install City provided parking lot light standards, pedestals and mast arms; maintain existing system during construction; and remove existing irrigation system and replace irrigation system complete with City provided irrigation valves, lines and all appurtenant components complete.

The City of Bellflower will provide the necessary “No Parking” signs and the Contractor shall post them no less than forty-eight (48) hours in advance of the construction. The payment for the sign posting shall be included in the price per square foot of asphalt concrete.

Price per square foot of all asphalt concrete pavement will include furnishing, spreading and rolling of said materials, complete in place and ready to use under the applicable bid items.

The Contractor shall abate dust nuisance by cleaning, sweeping and sprinkling with water or other means as necessary.

Full compensation for complying with the above requirements shall be considered as included in the respective bid unit price.

The work to be done consists of furnishing all labor, materials, methods and processes, implements, tools and machinery which are necessary and required for the Parking District No. 1 Improvements from Belmont Street to Laurel Street.

1. The Contractor shall notify the Public Works Department twenty-four (24) hours in advance of starting work on the contract.

2. The Contractor shall take all necessary precautions during all phases of the operation to safeguard persons and property from injury and/or damage in accordance with Section 7-10.4 of the Standard Specifications.

3. Any work not completed by the Contractor relative to the public safety and welfare, may be done by City forces, and payment for such work shall be deducted from the final payment for work covered by this contract.

4 After having officially started said contract, should Contractor discontinue work for any cause, he shall notify the Public Works Department of his intent to do so, and shall further notify the Public Works Department of the date of restarting operations.

5. Alterations. By mutual consent in writing of the parties signatory of the contract, alterations or deviations, increases or decreases, additions or omissions in the specifications may be made and this same shall be in no way affect or make void the contract. The City of Bellflower reserves the right to increase or decrease the quantity of any item or portion of the work, or to omit portions of the work in accordance with the Standard Specifications, as may be deemed necessary or expedient by the Public Works Department.

6. Extra Work. New and unforeseen work will be classed as extra work when such work cannot be covered by any of the various items or combinations of items for which there is a bid price.

   The Contractor shall not perform any extra work except upon written order from the Public Works Department. For such extra work, the Contractor shall receive payment previously agreed upon in writing.

2-2.1 **SCOPE OF WORK (Continued)**

7. Final Clean Up. Upon completion and before making applications for acceptance of the work, the Contractor shall clean the facility, and all ground occupied by him connected with the work, of all rubbish, excess materials, temporary structures and equipment; and all parts of the work shall be left in a neat and presentable condition.

8. Standards. Copies of the Standard Specifications of the City of Bellflower are on file or available through the Public Works Department of the City of Bellflower.

9. Permits. Contractor shall be responsible for any required permits, if applicable.

10. Inspection. The Director of Public Works, or his/her authorized agent, shall at all times have access to work during construction and shall be furnished with every reasonable facility for ascertaining full knowledge respecting the progress, workmanship and character of materials used and employed in the work. The Contractor shall notify the Director of Public Works, or his/her authorized agent, forty-eight (48) hours in advance when he will require inspection for either material or work to be done. The inspection of the work shall not relieve the Contractor of any of his obligations to fulfill the contract as prescribed. Defective work shall be made good, and unsuitable materials may be rejected, notwithstanding the fact that such defective work and unsuitable materials have been previously overlooked by the Director of Public Works or his/her authorized representative, and accepted or estimated for payment. The normal business hours for inspection are 7:30 a.m. to 4:00 p.m., Monday through Friday, excluding holidays. The City of Bellflower shall be reimbursed at the rate of $168.00 per hour for any inspection required other than the above mentioned hours.

11. When approved or directed by the Director of Public Works or his/her authorized representative, minor variations from the standard details may be done when considered best in order to meet existing conditions subsequently developed and not apparent previously.

2-3 SUBCONTRACT

2-3.1 General.

The Contractor shall perform, with its own organization, Contract work amounting to at least fifty percent (50%) of the Contract Price, unless otherwise specified by the Agency. Any designated, “Special Items,” may be performed by subcontract and the amount of any such, “Special Items,” so performed may be deducted from the Contract Price. These deductions occur before computing the amount required to be performed by the Contractor with its own organization. “Specialty Items,” will be identified by the Agency in the Bid. Where an entire item is subcontracted, the value of work subcontracted will be based on the Contract Unit Price. When a portion of an item is subcontracted, the value of work subcontracted will be based on the estimated percentage of the Contract Unit

Price. This will be determined from information submitted by the Contractor and subject to approval by the Engineer. Before the work of <u>any</u> Subcontractor is started, the Contractor shall submit to the Engineer for approval a written statement showing the work to be subcontracted giving the name and business of each Subcontractor and description and value of each portion of the work to be so subcontracted.

Failure of the Contractor to meet the fifty percent (50%) requirement may result in rejection of the bid or termination of the contract, at the Agency's discretion.

CONTRACT BONDS.

Both the Faithful Performance Bond and the Payment Bond shall each be for not less than one hundred percent (100%) of the total contract amount. The Payment Bond shall remain in force until thirty-five (35) days after the date of recordation of the Notice of Completion. The Faithful Performance Bond will not be released and shall remain in full force until one (1) year after that date to provide bonding for the one (1) year guarantee period. Bonds shall be obtained from bonding companies with a Best's rating of no less than A:V.

SECTION 3 – CHANGES IN WORK

3-3 EXTRA WORK.

3-3.2 Payment.

3-3.2.3 Markup.

The markups mentioned hereinafter shall include, but are not limited to, all costs for the services of superintendents, project managers, timekeepers and other personnel not working directly on the change order and pickup or yard trucks used by the above personnel. Those costs shall not be reported as labor or equipment elsewhere except when actually performing work directly on the change order and then shall only be reported at the labor classification of the work performed.

SECTION 6 – PROSECUTION, PROGRESS AND ACCEPTANCE OF THE WORK

6-1 CONSTRUCTION SCHEDULE AND COMMENCEMENT OF WORK.

The Contractor's proposed Construction Schedule shall be submitted to the Director of Public Works or his/her designee within **ten (10)** working days after the date of the Notice of Award of Contract. The schedule shall be supported by written statements from each supplier of materials or equipment indicating that all orders have been placed and acknowledged and setting forth the dates that each item will be delivered. Payments will be withheld pending receipt of any outstanding reports.

Prior to issuing the Notice to Proceed, the Director of Public Works or his/her designee will schedule a pre-construction meeting with the Contractor to review the proposed Construction Schedule and delivery dates, arrange the utility coordination, discuss construction methods and clarify inspection procedures.

The Contractor shall submit periodic Progress Reports to the Director of Public Works or his/her designee by the tenth (10th) day of each month. The report shall include an updated Construction Schedule. Any deviations from the original schedule shall be explained. Progress payments will be withheld pending receipt of any outstanding reports.

6-2 PROSECUTION OF WORK.

At all times the Contractor shall be present at the jobsite and shall provide full supervision of the work, unless work in progress is that of a subcontractor only, in which case, Contractor or subcontractor's supervisor shall be present at jobsite to provide full supervision of his work.

6-6.3 Payment for Delays to Contractor.

The Contractor may be compensated for damages incurred due to delays for which the Agency is responsible subject to the conditions and limitations below. Any such actual costs will be determined by the Engineer. The Agency will not be liable for damages which the Contractor could have avoided by any reasonable means, such as judicious handling of forces, equipment or plant. The determination of what damages the Contractor could have avoided will be made by the Engineer. The Agency will not be liable for Contractor overhead costs or for any expenses or costs incurred which are not directly attributable to this project.

The Contractor's failure to give notice of changed conditions promptly upon their discovery and before they are disturbed shall constitute a waiver of all claims in connection herewith.

The Contractor shall have no basis for a delay claim unless the event or occurrence delays completion of project beyond the contractual completion date.

The Contractor shall have no basis for a delay claim unless the delay is to a critical activity while the activity is on the critical path.

The Agency may make changes to the work or suspend the work, and no matter how many changes, such changes or suspensions are within the contemplation of the Contractor and Agency and will not be a basis for a compensable delay claim.

6-6.4 Written Notice and Report.

If the Contractor desires payment (or payment <u>and</u> an extension of time) for a delay as specified in 6-6.3, then it shall file with the Agency a written request and report of cause within five (5) days after event or occurrence giving rise to the delay claim and at least fifteen (15) days before the specified completion date. Failure by the Contractor to file these items within the times specified shall constitute a waiver of all claims herewith.

If the Contractor desires only an extension of time, then it shall file with the Agency a written request and report of cause within thirty (30) days after the beginning of the delay.

The request for extension must also be made at least fifteen (15) days before the specified completion date. Failure by the Contractor to file these items within the times specified will be considered grounds for refusal by the Agency to consider such request.

A written request and report of cause by a Contractor seeking time or compensation, or both, for delays to the project must include documents supporting the delay claim, including but not limited to, evidence of all facts supporting the alleged claim and the current schedule showing impact of the event or occurrence on the critical path.

6-7 TIME OF COMPLETION.

6-7.1 General.

The time for completion shall be as set forth in the Notice Inviting Sealed Bids.

6-7.2 Working Day.

The Contractor's activities shall be confined to the hours of 7:30 a.m. to 4:00 p.m., Monday through Friday, excluding City holidays. Deviation from these hours will not be permitted without the prior consent of the Engineer, except in emergencies involving immediate hazard to persons or property. Traffic may only be restricted between the hours of 9:00 am and 3:30 pm and subject to the review of the City Manager. One lane of traffic in each direction shall be maintained at all times on major and secondary streets.

6-9 LIQUIDATED DAMAGES.

Failure of the Contractor to complete the Work within the time allowed will result in damages being sustained by the Agency. Such damages are, and will continue to be, impracticable and extremely difficult to determine. For each consecutive calendar day, or portion thereof, in excess of the time specified for the completion of Work, as adjusted in accordance with Section 6-6 herein, the Contractor shall pay to the Agency, or have withheld from monies due it, the sum of $1,000 per day.

Execution of the Contract shall constitute agreement by the Agency and Contractor that $1,000 per day is the minimum value of the costs and actual damage caused by the failure of the Contractor to complete the Work within the allotted time and will be deducted from Contractor's final payment. Such sum is liquidated damages and shall not be construed as a penalty and may be deducted from payments due the Contractor if such delay occurs.

SECTION 7 – RESPONSIBILITIES OF THE CONTRACTOR

7-1 CONTRACTOR'S EQUIPMENT AND FACILITIES.

A noise level limit of 86 D.B.A. at a distance of fifty (50) feet shall apply to all construction equipment on or related to the job, whether owned by the Contractor or not. The use of excessively loud warning signals shall be avoided except in those cases required for the protection of personnel.

7-2 LABOR.

7-2.2 Laws.

The Contractor and all subcontractors, suppliers and vendors shall comply with applicable Agency, State and Federal orders regarding affirmative action to ensure equal employment opportunities and fair employment practices. Failure to file any report due under said orders will result in suspension of periodic progress payments. The Contractor shall ensure unlimited access to the job site for all equal employment opportunity compliance officers.

7-3 LIABILITY INSURANCE.

7-3.1 Insurance Requirements.

Bidder's attention is directed to the insurance requirements below. It is highly recommended bidders confer with their respective insurance carriers or brokers to determine in advance of bid submission the availability of insurance certificates and endorsements as prescribed and provided herein. If an apparent low bidder fails to comply strictly with the insurance requirements, then that bidder may be disqualified from award of the contract.

The Contractor shall indemnify and save harmless the Agencies, City Council, groups, committees, guards, employees, servants, consultants representing the Agency

Contractor shall procure and maintain for the duration of the contract insurance against claims for injuries to persons or damages to property which may arise from or in connection with the performance of the work hereunder by the Contractor, his agents, representatives, employees or subcontractors. The cost of such insurance shall be included in the Contractor's bid for various items of work.

A. Minimum Scope of Insurance. Coverage shall be in the form of:

1. ISO form number CG 00 01 1185 or the exact equivalent covering Commercial General Liability.

2. ISO form number CA 0001 06 92 covering Automobile Liability, Symbol 1, "any auto," or the exact equivalent.

3. Worker's Compensation insurance as required by the Labor Code of the State of California and Employers Liability insurance.

4. Pollution Liability Insurance shall be written on a Contractor's Pollution Liability form or other form acceptable to City providing coverage for liability arising out of sudden, accidental and gradual pollution and remediation.

B. Minimum Limits of Insurance. Contractor shall maintain limits no less than:

1. Commercial General Liability: $3,000,000 combined single limit per occurrence for bodily injury, personal injury and property damage. If Commercial General Liability or other form with a general aggregate limit is used, either the general aggregate limit shall apply separately to this project/location or the general aggregate limit shall be twice the required occurrence limit.

2. Automobile Liability: $1,000,000 combined single limit per accident for bodily injury and property damage.

3. Workers' Compensation and Employers Liability: Workers' compensation limits as required by the Labor Code of the State of California and Employers Liability limits of $1,000,000 per accident.

4. Pollution Liability: Contractor shall provide evidence of Pollution Liability Insurance. Limits shall be no less than $1,000,000 per claim and aggregate. Commercial General Liability Insurance is acceptable in lieu of Pollution Liability Insurance when such policy does not specifically exclude environmental damage, spills and cleanup for occurrences that are sudden and accidental.

C. Deductibles and Self-Insured Retentions. Any deductibles or self-insured retentions must be declared to and approved by the Agency. At the option of the Agency, either: the insurer shall reduce or eliminate such deductibles or self-insured retentions as respects the Agency, its officers, officials, employees, volunteers; or the Contractor shall procure a bond guaranteeing payment of losses and related investigations, claim administration and defense expenses.

D. Other Insurance Provisions. The policies are to contain, or be endorsed to contain on the Agency supplied form the following provisions:

1. Commercial General Liability and Automobile Liability Coverages.

a. Include the City of Bellflower as an additional insured. "The insurer agrees that the City of Bellflower and its City Council and/or all City Council appointed groups, committees, boards and any other City Council appointed body and/or elective and appointive officers, servants, employees or consultants of the Agency, when acting as such, are additional insured hereunder for the acts of the insured and such insurance shall be primary to any insurance of the Agency."

b. Not be suspended, voided, canceled by either party, reduced in coverage or in limits or have a change in insurance company except after thirty (30) days prior written notice by certified mail, return receipt requested, has been given to the Agency. Any failure

to comply with reporting provisions of the policy(ies) shall not affect coverage provided to the City of Bellflower as enumerated in this endorsement.

c. Limited classifications, restricting endorsements, exclusions or other special provisions contained in the policy shall not act to limit the benefits of coverage as they shall apply to the City of Bellflower as enumerated in this endorsement. However, nothing herein contained shall affect any rights of the insurer against the insured.

d. The Contractor's insurance shall apply separately to each insured against whom claim is made or suit is brought, except with respect to the limits of the insurer's liability.

e. Insurance Endorsement Requirements. Endorsements to the policies and/or certificates of insurance providing the required liability insurance coverage shall be obtained by Contractor, and filed with the City, containing the following three (3) provisions.

1. Additional Insureds: The City and its elected and appointed boards, officers, agents, and employees shall be named as additional insureds; and

2. Notices: Each policy required shall provide that such policy shall not be terminated, nor canceled, nor the coverage substantially modified, except upon thirty (30) days prior written notice given to City by the Insurer and the Contractor; and

3. Primary: The Contractor's insurance shall be primary. Any other insurance maintained by the City shall not be deemed excess or contributing with the insurance required by this Agreement.

2. Workers' Compensation and Employers Liability Coverage

The Insurer shall agree to waive all rights of subrogation against the Agency, its officers, officials, employees, volunteers for losses arising from work performed by the Contractor for the Agency.

3. All Coverages

Each insurance policy required by this clause shall be endorsed to state that coverage shall not be suspended, voided, canceled by either party, reduced in coverage or in limits or have a change in insurance company except after thirty (30) days prior written notice by certified mail, return receipt requested, has been given to the Agency.

E. Acceptability of Insurers. Insurance is to be placed with insurers with Best's rating of no less than A- (minus).

F. Verification of Coverage. Contractor shall furnish the Agency with certificates of insurance and with original endorsements effecting coverage required by this clause. All insurance policies must be carriers admitted in California. The certificates and endorsements for each insurance policy are to be signed by a person authorized by that insurer to bind coverage on its behalf. The certificates and endorsements are to be on forms provided by the Agency. Where by statute the Agency's workers' compensation-related forms cannot be used equivalent forms approved by the Insurance Commissioner are to be substituted. All certificates and endorsements are to be received and approved by the Agency within the time limits contained in the specifications. The Agency reserves the right to require complete, certified copies of all required insurance policies at any time.

G. Subcontractors. Contractor shall include all subcontractors as insureds under its policies or shall furnish separate certificates and endorsements for each subcontractor. All coverages for subcontractors shall be subject to all of the requirements stated herein.

Any provision in any of the Construction Documents dealing with the insurance coverage provided pursuant to these requirements, is subordinate to and superseded by the requirements contained herein. These insurance requirements are intended to be separate and distinct from any other provision in this agreement and are intended by the parties here to be interpreted as such.

Contractor agrees to endorse third party general liability coverage required here to include as additional insureds City, its officials, employees and agents. Contractor also agrees to require this same provision of all subcontractors, joint venturers or other parties engaged by or on behalf of Contractor in relation to this agreement.

7-3.2 Contractor Assumed Liability.

The Agency, the Board and all officers, agents and employees of Agency shall not be answerable or accountable in any manner for any loss or damage that may happen to the work or any part thereof; or for any of the materials or other things used or employed in performing the work; or for injury to any person or persons, either workmen or the public; or for damage to any person or persons, either workmen or the public, or for damage to adjoining property from any cause which might have been prevented by the Contractor, or his/her/its workers, or any one employed by him/her/it; against all of which injuries or damages to persons and property the Contractor, having control over such work, must properly guard.

The Contractor shall be responsible for any damage to any person or property resulting from defects or obstructions or any time before its completion and final acceptance, and shall indemnify and save harmless the Agency, the Board and each of its officers, agents and employees of Agency from all suits or actions of every name and description brought for, or on account of, any injuries or damages received or sustained by any

person or persons, by the Contractor, his/her/its servants or agents, in the construction of the work or in consequence of any negligence in guarding the same, in improper materials used in its construction, by or on account of any act or omission of the Contractor or his/her/its agents, and so much of the money due the Contractor under and by virtue of the Contract as shall be considered necessary by the Agency may be retained by the Agency until disposition has been made of such suits or claims for damages aforesaid.

If, in the opinion of the Engineer, the precautions taken by the Contractor are not safe or adequate at any time during the life of the Contract, then the Engineer may order the Contractor to take further precautions; and if the Contractor fails to do so, then the Engineer may order the work done by others and charge the Contractor for the cost thereof, such cost to be deducted from any monies due or becoming due the Contractor. Failure of the Engineer to order such additional precautions, however, shall not relieve the Contractor from his full responsibility for public safety.

From time to time, during the period of this contract, the Agency may be served with claims, as a result of conduct by Contractor, which claims are for property damage or other damage in amounts of $250.00 or less. Those claims may be resolved informally by Agency, within Agency's discretion and charged back against Contractor by funds held in retention to meet these claims. The Agency will appoint a Claims Administrator who will act on behalf of the Agency and Contractor (the "Administrator").

The Administrator will recommend to Agency the resolution of any claim. The Administrator's recommendation for payment shall be paid by Contractor within thirty (30) days after the date of the recommendation. If Contractor fails to make payment to claimant within thirty (30) days after the Administrator's decision, then the Agency may make payment to the claimant and withhold, as retention, sufficient funds to reimburse the Agency upon completion of the contract. Prior to making his recommendation, the Administrator will obtain from Contractor all evidence relevant to the claim. Contractor will have ten (10) days after the date requested by the Administrator to submit any evidence in the defense of the claim; provided, that failure to do so waives any objection by Contractor to payment of the claim if, after an independent investigation, it is the opinion of the Administrator to make payment of the claim.

7-6 THE CONTRACTOR'S REPRESENTATIVE.

Before the start of any work, the Contractor shall provide the Inspector with at least one (1) telephone number where the Contractor's Representative or alternate may be reached 24 hours a day.

7-7 COOPERATION AND COLLATERAL WORK.

The Contractor is advised as to the possibility of other construction projects within the proposed construction zone by the Agency, other governing agencies or private enterprises. In the event of such projects, the Contractor shall coordinate with the applicable parties as to the extent of any time required to complete their work and shall schedule his/her/its work and conduct his/her/its operations so as to permit access and time as required for the concurrent work. The Contractor shall immediately notify the

Agency in the event of a delay in scheduling caused solely by his concurrent work. Payment for the above, if any, shall be deemed as included in the items of work as shown on the bid sheet and no additional compensation will be allowed.

7-8 PROTECTION AND RESTORATION OF EXISTING IMPROVEMENTS.

The Contractor shall protect existing buildings, paving, landscaping and other services or facilities on-site and adjacent to the site from damage caused by site work operations and access to the site. Cost of repair and restoration of damaged items shall be at the Contractor's expense.

7-15 PAYROLL RECORDS.

Certified Payroll Records for the Contractor and Subcontractors shall be submitted to the Agency on approved forms by the tenth day of each month. Progress payments may be withheld pending receipt of any outstanding records. The Agency may conduct interviews with workers to verify compliance with applicable labor laws and wage requirements, suspected irregularities and discrepancies will be reported to the appropriate labor compliance agencies for review and enforcement.

SECTION 9 – MEASUREMENT AND PAYMENT

9-3 PAYMENT.

9-3.2 Partial and Final Payment.

The closure date for periodic progress payments will be the last calendar day of each month. The final progress payment will not be released until the Contractor returns the control set of Plans and Specifications showing the as-built conditions.

Progress payments may be withheld pending receipt of certified payrolls or periodic construction schedules and for other reasons as noted in the General Specifications. Prior to releasing a progress payment, the Agency may require the Contractor to provide Subcontractor releases indicating the Contractor has paid the Subcontractors for completed work, for which the Contractor has been paid.

The full five percent (5%) retention will be deducted from all payments. The final retention will be authorized for payment thirty-five (35) days after the date of recordation of the Notice of Completion. All Payment Requests shall be verified by the Inspector before they are submitted to the Agency. All properly submitted Payment Requests shall be paid by the Agency within thirty (30) days after the Agency's receipt of the Request.

9-3.3 Delivered Materials.

Materials and equipment delivered but not incorporated into the work shall not be included in the estimate for progress payment.

SUBSTITUTION OF SECURITIES

In conformance with the State of California Public Contract Code Section 22300, the Contractor may substitute securities for any monies withheld by the Agency to ensure performance under the Contract pursuant to a separate agreement between the Contractor and Agency (the "Separate Securities Agreement").

At the request and expense of the Contractor, the Contractor has the option to deposit securities, which have been approved by the Agency pursuant to the Separate Securities Agreement, and deposited with a State or Federally chartered bank as the escrow agent. The securities will be used as a substitute for retention earnings required to be withheld by the Agency, pursuant to the construction contract. The securities shall have no obligation to any other construction contract for substitution of securities in lieu of retention. When the Contractor deposits the Agency approved securities with the escrow agent, the escrow agent shall notify the Agency within ten (10) calendar days of the deposit. Said securities shall be evaluated quarterly by the escrow agent to verify the current market value. If the current market value of the securities falls below the required amount, then the escrow agent shall notify the Contractor and require additional securities and/or cash to be submitted for Agency approval and be held in the escrow account to meet the Contractor's obligations.

The securities shall be held by the escrow agent until such time as the escrow agent receives written notification from the Agency that the Contractor has satisfactorily completed his contract obligations. The type of securities deposited and the method of release shall be approved by the City Attorney's office and comply with the Separate Securities Agreement.

CITY OF BELLFLOWER

PARKING DISTRICT NO. 1 IMPROVEMENTS
FROM BELMONT STREET TO LAUREL STREET

SPECIFICATIONS NO. 15/16-02

TECHNICAL PROVISIONS

PART 2 - CONSTRUCTION MATERIALS

SECTION 200 - ROCK MATERIALS

200-2 UNTREATED BASE MATERIALS.

200-2.1 General. [Add the following]:

Base material shall be crushed miscellaneous base conforming to Section 200-2.4 Crushed Miscellaneous Base.

SECTION 201- CONCRETE, MORTAR, AND RELATED MATERIALS

201-1 PORTLAND CEMENT CONCRETE.

201-1.2 Materials.

201-1.2.1 Portland Cement. [Replace first sentence of the first paragraph]:

All cement to be used or furnished shall be Type V.

201-3 EXPANSION JOINT FILLER AND JOINT SEALANTS.

201-3.2 Pre-molded Joint Filler. The Contractor shall use 1/4" bituminous type expansion joint filler only.

SECTION 203 - BITUMINOUS MATERIALS

203-6 ASPHALT CONCRETE.

203-6.1 General. [Add the following to the end of the subsection]:

203-11.3 Composition and Grading. Conventional asphalt concrete shall be type C-PG 64-10.

SECTION 300-2 – UNCLASSIFIED EXCAVATION

300-2.1 General [Add the following to the end of the subsection]:

Unclassified excavation shall include the removal and disposal to the appropriate facility all asphalt concrete; road base; native material, including but not limited to organics and all deleterious material; Portland Cement Concrete; landscape materials and planter soil.

The following items of work are included in unclassified excavation:

- Saw-cutting, removal and disposal of existing concrete curb and gutter sidewalk, cross gutter and concrete ADA ramp within the project site and as shown on the plan or directed by the Engineer, and in addition, full-depth AC pavement, base.
- Removal of excess spoil from excavation, disposal of debris, shrubs, rubbish and excess material away from site and disposal and payment of all required fees at a licensed disposal site.
- Maintaining dust control at all times by limited watering.
- Removal and disposal of any additional items not specifically mentioned herein, which may be found within the work limits or are shown on the plans to be removed.
- Removal and disposal of unnamed concrete improvements.
- Restoration and clean-up of the site.
- Providing for traffic control and maintenance of access, security and safety including signs, barricades, flashers, covers, plates and chain link fencing as may be required.
- Protecting in place of existing water mains, sewers, storm drains, meters, valve covers, walls, fences, curbs, fire hydrants, telephone and power poles, and other existing structures.
- Providing all necessary means to avoid tracking of asphaltic material on adjacent public street, alleys and parking lots.

All materials removed will be lawfully disposed of at a site secured by the Contractor. The Contractor will make every effort to recycle excavated and demolition materials. The Contractor will provide the Engineer with a letter indicating the final disposition of all excavated and demolition materials from the project within five (5) working days after project completion.

No excavated or demolition materials will be left in the public right of way overnight. Equipment may be stored within the subject parking lot as directed by the engineer or his designee.

All existing improvements to be joined shall be cut in a clean straight line along the join line by use of a concrete cutting saw. Compensation for this requirement shall be considered as included in the price bid in the proposal form and no additional compensation will be allowed therefore.

Sawcutting shall consist of cutting existing Portland cement concrete to facilitate its removal. Cutting shall be accomplished by the use of a power driven saw. The depth of the cut shall be deep enough to provide a clean, straight break without loosening, cracking, or damaging adjoining asphalt or concrete. Under this item, the use of a grinder will not be allowed in lieu of power-driven saw. Residue from sawcutting shall be vacuumed up while sawcutting.

300-1.4 Payment
ADD the following text:
Payment shall include the cost for all sawcutting and removal of asphalt concrete, aggregate base, compaction, concrete, haul away, and disposal to facilitate the construction of proposed improvements and no additional compensation will be allowed therefore.

SECTION 303 – CONCRETE AND MASONRY CONSTRUCTION

303-5 CONCRETE WALKS, GUTTERS, ACCESS RAMPS, AND ALLEY INTERSECTIONS

303-5.1.1.3 Sidewalk

Concrete sidewalk shall be per SPPWC Standard Plan 113-2 as indicated on the plans. Concrete shall be Class 520-C-2500. Concrete shall be color concrete to march existing color, color concrete shall be integral, and powder additive color concrete is not allowed.

Concrete sidewalk shall be constructed to the line, grades and designs shown on the plans or as ordered by the Engineer. Existing surfaces to be joined shall be sawcut on a neat, straight line at the join location. Any and all gas or water meter boxes falling within the limits of sidewalk construction shall be adjusted to the finished grade of the new sidewalk. The Contractor shall remove and replace any new concrete work with graffiti markings and blemishes at no additional cost to the City.

Prior to placement of new sidewalk, contractor shall grind or prune all obstructing roots if present.

A sidewalk ½-inch radius edging tool is be used to finish the back edge of all curbs. Sidewalk score lines shall have a minimum finished depth of ½-inch. Walkway replacement needed to join new sidewalk shall be in kind to the walkway removed or as directed by the Engineer's representative.

<u>Limited infill and compaction of suitable base material will be required under certain portions of sidewalk. Contractor shall include the cost of material, labor and compaction of such material in the unit price per bid.</u>

Any appurtenant PCC Improvement constructed as part of this project and not included with a unit price bid quote or otherwise covered for payment herein shall be paid at the unit price for 4 inch Sidewalk per square foot prorated to reflect the true amount of PCC material being constructed, as approved by the Engineer's Representative. The prorated unit price bid for the appurtenant PCC improvement shall include all costs of subgrade preparation, and the excavation, furnishing and compacting of backfill material and no additional compensation will be allowed therefore.

303-5.1.1.4 Curb Ramp

Concrete Curb Ramps shall be per SPPWC Standard Plan 111-4, case and type per plans. Concrete shall be Class 520-C-2500.

The geometry shown on the plans is representational. The final limits and geometry of the required curb ramp shall be verified and placed in the field by the contractor in order to ensure the required grades and clearances are obtained.

All work within the 1' rumble strip at grade breaks of the sidewalk shall be considered as part of the curb ramp. All work past the 1' rumble strip, which has been approved by the engineer, shall be considered as extra sidewalk or curb and gutter items and will be paid for per the respective unit price.

Concrete Curb Ramps shall be constructed to the line, grades and designs shown on the plans or as directed by the Engineer. Existing surfaces to be joined shall be sawcut on a neat, straight line at the join location. All sawcut locations along existing cross gutters shall be cut in a curve conforming to the existing curb return and shall be cut at a set offset from the flow line as approved by the City Engineer. The flow line shall be maintained, ensuring that ponding does not occur in the existing cross gutter.

The Contractor shall remove and replace any new concrete work with graffiti markings and blemishes at no additional cost to the City.

Additionally, all curb ramps shall have a detectable warning surface that extends the full width of the ramp and the full length of the ramp up to the score marks no less the 3'x4'. The finished surfaces of the detectable warning surface shall be free from blemishes. Type and color included under section 303-5 herein.

The City Engineer shall have final say regarding the case and type of curb ramp to be installed and shall retain the right to revise the ramp designation at any point prior to construction.

ADD the following subsections:
303-5.1.4 Detectable Warning Surface

Detectable warning surface for all new ramp construction shall be cast-in-place. The color of the detectable warning surface shall be dark blue and shall be provided through Armorcast or approved equal. The contractor shall provide a color and material sample for City approval prior to installation of truncated warning surface.

Prefabricated detectable warning surface shall be in conformance with the requirements established by the Department of General Services, Division of State Architect and in conformance with the manufacturer's recommendations. The manufacturer shall provide a written 5-year warranty for prefabricated detectable warning surfaces, guaranteeing replacement when there is defect in the dome shape, color fastness, sound-on-cane acoustic quality, resilience, or attachment. The warranty period shall begin upon acceptance of the contract.

SECTION 307 – STREET LIGHTING AND TRAFFIC SIGNAL SYSTEMS

307-1 GENERAL.

Add the following to the first paragraph:

Wherever reference is made to any of the regulations or codes mentioned above, the reference shall be construed to mean the regulation or code that is in effect on the date of the Notice Inviting Bids for the Work.

Replace the second paragraph with the following:

All incidental parts which are not shown on the Plans, specified in the Specifications, or included in the Schedule of Prices, and which are necessary to complete or modify the existing systems, shall be furnished and installed as though such parts were shown on the Plans, specified in the Specifications, or included in the Schedule of Prices. The cost for furnishing and installing these incidental parts shall be considered as included in the Contract Unit Price for the equipment that requires such parts to be fully operational, or in the prices in the Bid for the appropriate lump sum Bid item. All systems shall be in satisfactory operation at the time of completion and acceptance of the Work.

307-2 MAINTENANCE OF EXISTING AND TEMPORARY SYSTEMS.

Replace the first sentence of the first paragraph with the following:

The agency presently maintaining the existing electrical systems will continue to maintain the existing electrical systems, and will repair or replace existing electrical systems as necessary to maintain the existing electrical systems in effective operation. Damages to existing electrical systems caused by the Contractor shall be repaired or replaced by the Contractor.

Add the following after the first paragraph:

Keep existing electrical system or temporary replacement in working order during the progress of the work. Shutdown is allowed for alteration or removal of the system. Lighting system shutdown must be limited to normal working hours. Lighting system shutdown must not interfere with the regular lighting schedule. Notify the Engineer before performing work on the existing system.

Verify location and depth of existing conduits, pull boxes, and other electrical facilities before using tools or equipment that may damage those facilities or interfere with an electrical system.

Notify the Engineer immediately if existing facility is damaged by your activities. Repair or replace damaged facility promptly. If you fail to complete the repair or replacement, promptly, the City will repair or replace and deduct the costs.

Parking lot is to remain open to traffic while the existing lighting system is modified:

1. Keep the existing system in working order
2. Make the final connection so the modified circuit is in operation by nightfall

Keep temporary electrical installations in working order until no longer required. Remove temporary installations as specified in these Special Provisions.

307-4 DAMAGE TO EXISTING SYSTEMS.

Add the following paragraph after paragraph one:

Should the Contractor fail to promptly perform the required repairs or replacements, the maintaining agency will perform such repairs and replacements and the costs thereof will be deducted from any monies due the Contractor.

Add the following subsections:

307-6.1 Schedule of Values. Determine quantities required to complete work. Submit the quantities as part of the schedule of values.

Provide a schedule of values for each lump sum bid item.

The schedule of values must include type, size, and installation method for:

1. Foundations
2. Standards and poles
3. Conduit
4. Pull boxes
5. Conductors and cables
6. Service equipment enclosures

307-6.2 Scheduling of Work. Except service installation and service equipment enclosure, do not work above ground until all materials are on hand to complete the electrical work at each location. Schedule work to allow each system to be completed and ready for operation before opening the corresponding section of the roadway to traffic.

Lighting system will not be placed in operation before starting the functional test period specified in section 307-18.1(d).

Do not pull conductors into conduit until:

1. Pull boxes are set to grade
2. Bonding and grounding is completed

307-10 STANDARDS, PEDESTALS AND MAST ARMS.

Add the following:

Standards and pedestals shall be supplied by South Coast Lighting and shall be the make and model detailed on the project plans.

Street lighting electrolier standards shall be installed 30 inches from the top of curb to the centerline of the pole unless otherwise specified or otherwise shown on the Plans.

307-11.1 Pull Boxes. Add the following:

Pull boxes and extensions shall be precast reinforced concrete of the sizes and details shown on the Standard Plans. Unless otherwise specified in the Special Provisions or shown on the Plans, lighting pull boxes shall be size No. 5.

Reinforcement for concrete pull boxes shall be bar reinforcement or ¾ inch mesh, No. 20 U.S. gage minimum, hardware cloth.

Covers shall be provided with at least one recessed lifting bolt or bar as shown on the Standard Plans. The lifting bolts or bars shall be designed so as to not provide a path for electrical current to follow through the lid.

307-12 CONDUIT

307-12.1 General. Replace the second sentence of the first paragraph with the following:

All conduit and fittings shall be Schedule 80 PVC.

Add the following to the tenth paragraph:

Bends shall be constructed using manufactured elbows only and shall have a minimum radius of not less than six times the inside diameter of the conduit.

307-12.4 Rigid No Metallic Conduit.

Add the following after the first paragraph:

All PVC conduits shall be terminated with a bell end.

307-13.4 Bonding and Grounding.

Add the following after the first paragraph:

Ground rods shall be 8’ x ½” copper clad.

Replace the ninth paragraph with the following:

For multiple circuits, the bonding conductor system shall be grounded at the service point and at each street lighting pull box with a ground rod.

307-16.4 WIRING/CONDUCTORS.

Add the following after the first paragraph:

Sufficient conductors shall be provided to perform the operation of the lighting system.

Replace the last sentence of the third paragraph with the following:

The connector shall be installed in the base of the luminaire standard and be readily accessible.

Five (5) ampere fused splice connectors shall be used. Fuses shall be standard midget, ferrule type.

The splice connector shall completely enclose the fuse and shall protect the fuse against damage from water and weather. The contact between the fuse and fuse holder shall be by spring pressure. Springs shall not be a part of the current carrying circuit. The terminals of the splice connector shall be rigidly crimped, using a tool of the type recommended by the manufacturer of the fused spliced connector, to the line and ballast conductors. The terminals shall be insulated and made waterproof in accordance with the splice connector manufacturer’s recommendations.

307-14 SERVICES. Add the following:

All electrical service connection costs that may be incurred shall be paid by the Contractor to the servicing utility company prior to the expiration of the first 10 percent of the number of working days allowed per 6-7 of the Special Provisions, unless otherwise specified in the Special Provisions.

Service equipment enclosure shall be a Type II-B with Type V photoelectric control per 2010 Caltrans Standard Plan ES-2B and shall have the following features:

1. 120 Volt / 240 Volt metered service.

2. Circuit breakers required:
   a. 100 Amp 2 pole breaker (lighting main)
   b. 30 Amp 1 pole breaker (parking lot lighting)
   c. 30 Amp 1 pole breaker (sidewalk lighting)

d. 15 Amp 1 pole breaker (lighting control)
e. 15 Amp 1 pole breaker (irrigation)

3. Circuit breakers shall be the plug-in type.

4. Cabinet shall be fabricated from aluminum sheeting with a powder coated finish. Color to be determined by the Engineer prior to ordering.

5. Circuit breakers shall be marked with identifying labels for each circuit breaker.

6. Type V photoelectric control contactor and test switch assembly shall be installed in the service cabinet. Photoelectric control contactors shall be as follows:

   a. Parking lot circuit: 30 Amp electrically held contact
   b. Sidewalk circuit: 30 Amp electrically held contact

   Photoelectric control assembly shall be installed within the circuit breaker compartment of the service equipment enclosure, and accessible to the Engineer after installation of electrical meter.

7. Title 24 compliant, 7-day time clock shall be installed within the service equipment enclosure and be readily accessible.

The Contractor shall be responsible for contacting the power company, arranging and providing for the electrical service cutover, and ensuring that adequate notice is provided to the servicing electric company in advance of need.

307-18 TESTING.

307-18.1(d) Functional. Add the following:

The functional testing period must comply with section 307-6.2, Scheduling of Work, of these Technical Provisions.

Prior to initial turn-on of the new lighting system, all equipment, as shown on the Plans and/or specified in the Specifications, shall be installed and operable.

307-19 PAINTING AND GALVANIZING. Add the following after the first paragraph:

All new electroliers and related accessories shall be painted.

Add the following section:

307-21 PAYMENT.

The contract lump sum price paid for Installing Lighting System; for removing existing system; for furnishing, installing, removing and disposing of temporary lighting

system; shall include full compensation for furnishing all labor, materials, tools, equipment and incidentals, and for doing work involved in furnishing and installing, modifying, or removing the system as shown on the plans, as specified in these specifications and the Special Provisions, and as directed by the City Engineer, including any necessary, conduit, pull boxes, wiring and splicing; excavation and backfill; concrete foundations; restoring sidewalk, pavement and appurtenances damaged or destroyed during construction; salvaging existing materials; and making all required tests. Temporary overhead circuits shall provide the sufficient number and gauge of conductors to provide full operation of the lighting system during construction. Furnishing the temporary lighting system shall include providing temporary, above-ground foundations during construction.

Full compensation for all additional materials and labor, not shown on the plans or specified, which are necessary to complete the installation of the lighting system, shall be considered as included in the price paid for the systems and no additional compensation will be allowed therefor.

308 – LANDSCAPE AND IRRIGATION INSTALLATION

308-1 General. Add the following:

The contract lump sum price paid for protect existing irrigation system in place provides for the protection of all existing irrigation system components and repairing or replacing any irrigation system components damaged as a result of construction, and shall include full compensation for furnishing all labor, tools, equipment and incidentals for said repair or replacement and no additional compensation will be allowed therefor.

SECTION 314 – TRAFFIC STRIPING, CURB AND PAVEMENT MARKINGS, AND PAVEMENT MARKERS

314-4 APPLICATION OF TRAFFIC STRIPING AND CURB AND PAVEMENT MARKINGS

ADD the following text:

The Contractor shall furnish and apply parking lot stripes and pavement markings as shown on the plans and as directed by the Owner's Representative. Placement of striping and markings shall conform to the requirements of Section 84 and 85 of the Caltrans Standard Specifications, latest edition, the Caltrans Standard Plans and these Special Provisions.

Nothing in these Special Provisions shall relieve the Contractor from the responsibilities established in Subsection 7-10, "Public Convenience and Safety", of the State Standard Specifications.

Two applications of paint shall be made for parking lot stripes and pavement markings.

314-5.6 Measurement and Payment

ADD the following text:

Payment for parking lot striping and markings shall be at the **Lump Sum (LS)** bid price and shall include full compensation for furnishing all labor, materials, tools, equipment and incidentals, and for doing all the work involved and as directed by the Engineer and no additional compensation will be made therefore.

FINAL CLOSEOUT AGREEMENT AND RELEASE OF ALL CLAIMS

THIS AGREEMENT AND RELEASE OF ALL CLAIMS is made in Bellflower, California, this _____ day of _____, 20__ by and between THE CITY OF BELLFLOWER, hereinafter referred to as "AGENCY"; and _____, hereinafter referred to as "CONTRACTOR".

KNOW ALL MEN BY THESE PRESENTS:

The undersigned, as the authorized representative of CONTRACTOR, for and in consideration of _____ DOLLARS ($_____), to be paid to the CONTRACTOR, does hereby and for each of its successors, assigns and partners, release, acquit and forever discharge the AGENCY, and each of its successors, assigns, officers, agents, servants, consultants and employees, from any and all rights, claims, warranties, demands, debts, obligations, liabilities, actions, damages, costs, expenses and other claims whatsoever which might have been asserted against AGENCY by reason of any matter or thing which was the subject matter of or basis for:

1. The performance of all terms and conditions of that certain contract dated _____, 20__ for SPECIFICATIONS NO. _____, AGENT PROJECT NAME _____.

2. Change Order Nos. _____ through _____, inclusive, as approved by AGENCY and CONTRACTOR, pertaining to SPECIFICATIONS NO. _____;

3. The claim for equitable contract adjustment time extension required to complete all improvements for SPECIFICATIONS NO. _____, dated _____, 20__ in a timely manner and to the satisfaction of the City Engineer of AGENCY, as compromised and settled by Change Order No. _____ approved _____, 20__;

4. Claims, known or unknown, of any subcontractors of CONTRACTOR relating to SPECIFICATIONS NO. _____ and Change Order Nos. _____ through _____, inclusive relating thereto.

Excepting only the payment of the retained cash amount of $ _____ and the release of bonds to guarantee labor and materials payment and faithful performance.

The undersigned, as the authorized representative of AGENCY, for and in consideration of the CONTRACTOR'S completion of SPECIFICATIONS NO. _____, does hereby and for each of its successors, assigns and partners, release, acquit and forever discharge CONTRACTOR, and each of its successors, assigns, officers, agents, servants and employees from any and all rights, claims, warranties, demands, debts, obligations, liabilities, actions, damages, costs, expenses and other claims whatsoever which might have been asserted against CONTRACTOR by reason of any matter or thing which was the subject matter of or basis for:

Change Order Nos. _____ through _____, inclusive, as approved by AGENCY and CONTRACTOR, pertaining to SPECIFICATIONS NO. _____.

Excepting only CONTRACTOR'S completion of all work as specified by SPECIFICATIONS NO. _____.

Nothing contained herein shall waive or alter the rights, privileges and powers of the AGENCY or the duties, liabilities and obligations of the CONTRACTOR and its surety with respect to SPECIFICATIONS NO. _____.

All work for SPECIFICATIONS NO. _____ shall be completed to acceptable standards and tolerances prior to execution of this agreement.

Upon execution of this agreement, the AGENCY agrees to immediately file and record a Notice of Completion with the County Recorder's Office to begin the statutory lien period. The AGENCY agrees the execution of this agreement commences the running time of any warranty or guarantee periods specified in the contract. The AGENCY and CONTRACTOR agree that the CONTRACTOR is liable for damages for delay, liquidated damages, in the amount of $ _____ for failure to complete the work specified in SPECIFICATIONS NO. _____ within _____ (___) working days, time allowed under Section _____ of SPECIFICATIONS NO. _____.

The presently retained amount $_____ is five percent (5%) of the total adjusted contract cost $_____, for SPECIFICATIONS NO. _____, less liquidated damages of $_____. Said retention monies will be released to the

CONTRACTOR at the expiration of the lien period thirty-five (35) calendar days after recordation of the Notice of Completion by the County Recorder's Office).

CONTRACTOR and AGENCY agree that the total adjusted contract price and time of performance for SPECIFICATIONS NO. _____ as follows:

ORIGINAL CONTRACT PRICE $_____ _____ working days

CHANGE ORDER	DESCRIPTION	ADD (DEDUCT) AMOUNT	TIME EXTENSION
TOTAL CHANGE ORDER NOS. _____-____		_____	_____

FINAL ADJUSTED CONTRACT PRICE $ _____ _____ working days

The final completion date of the work for SPECIFICATIONS NO. _____ is _____, 20__.

It is understood and agreed by the undersigned the facts with respect to which the foregoing release is given may hereafter turn out to be other than or different from the facts now known to be or believed by said undersigned to be true, and the undersigned hereto expressly assume the risk of the facts turning out to be different than they now appear, and agree that the foregoing Release shall be, in all respects, effective and not subject to termination or rescission by any such difference in facts. The undersigned hereby expressly waive any and all rights the undersigned have or may have under California Civil Code Section 1542, which provides as follows:

> "A general release does not extend to claims which the creditor does not know or suspect to exist in his favor at the time of executing the Release which if known by him must have materially affected his settlement with the debtor."

It is understood and agreed that this settlement is a compromise of doubtful and disputed claims, and that the releases made by the CONTRACTOR and AGENCY herein are not to be construed as an admission or admissions of liability on the part of either party and that the parties deny liability thereof and intend merely to avoid litigation and to buy their peace.

The undersigned agree they will forever refrain and forebear from commencing, instituting or prosecuting any lawsuit, action or other proceeding against the other party based on, arising out of, or in any way connected with the subject matter of this Release of All Claims.

The CONTRACTOR hereby releases and agrees to indemnify the AGENCY for all claims, including those of its Subcontractors for any and all delay and impact costs.

The terms of this release shall not excuse the responsibility of the CONTRACTOR to guarantee all work for a period of one (1) year from the date of acceptance of all improvements by the AGENCY. CONTRACTOR shall repair and replace any and all improvements damaged or failed (ordinary wear and tear, and usual abuse or neglect accepted) and shall maintain the original Faithful Performance Bond in full force and effect for the entire guarantee period.

The CONTRACTOR represents and warrants to the AGENCY the CONTRACTOR has not heretofore assigned, or transferred, or purported to assign or transfer to any person, firm, corporation, association or entity any of the rights, claims, warranties, demands, debts, obligations, liabilities, actions, damages, costs, expenses and other claims whatsoever and the CONTRACTOR agrees to indemnify and hold harmless the AGENCY against, without limitation, any and all rights, claims, warranties, demands, debts, obligations, liabilities, actions, damages, costs, expenses and other claims, including attorneys' fees, arising out of or connected with any such assignment or transfer or purported assignment or transfer.

The undersigned acknowledge they have been represented by counsel of their own choice in connection with the preparation and execution of this mutual Release of All Claims in full, and understand, and voluntarily consent, and agree to each and every provision contained herein.

The undersigned further declare and represent no promise, inducement or agreement, not herein expressed, has been made to the undersigned and this Release of All Claims contains the entire agreement among the parties hereto regarding the subject matter hereof and the terms of this Release of All Claims are contractual and not a mere recital.

The persons executing this Release of All Claims represent and warrant to the other party that the execution and performance of the terms of this Release of All Claims have been duly authorized by all requisite corporate, partnership, individual or other entity requirements and that said persons have the right, power, legal capacity and authority to execute and enter into this Release.

Executed this _____ day of _____, 20__ at Bellflower, California.

CITY:

_____
City Manager – City of Bellflower

ATTEST:

_____
City Clerk – City of Bellflower

APPROVED AS TO FORM:

_____
City Attorney – City of Bellflower

CONTRACTOR:

_____
(Name of Contractor, Company or Corporation)

Telephone No. _____

By: _____
(Print)

_____
(Signature)

_____
(Title)

NOTE: SIGNATURE'S OF CORPORATE AND SURETY OFFICIALS MUST BE NOTARIZED.

CONSTRUCTION NOTES:

1. [RC] EXISTING ELECTRICAL SERVICE ENCLOSURE, PHOTO ELECTRIC CONTROL AND TIME CLOCK. COORDINATE REMOVAL WITH SCE SERVICE PLANNER MR. TIM MORGAN AT (310) 608-5278.
2. FURNISH AND INSTALL NEW 120V/240V TYPE II ELECTRICAL SERVICE ENCLOSURE ON SIDE OF TRASH ENCLOSURE PER PANEL SCHEDULE.
3. [RC] EXISTING PULL BOX AND INSTALL NEW No. 5 PULL BOX IN PLACE. LID SHALL READ "LIGHTING".
4. INSTALL NEW CONDUIT UNDER GRAY RIBBONED AREA OF SIDEWALK.

[AB] ABANDON. IF APPLIED TO CONDUIT, REMOVE CONDUCTORS.

[CC] CONNECT NEW AND EXISTING CONDUIT. REMOVE EXISTING CONDUCTORS AND INSTALL NEW CONDUCTORS AS INDICATED.

[RC] EQUIPMENT OR MATERIAL TO BE REMOVED AND BECOME THE PROPERTY OF THE CONTRACTOR.

LEGEND:

= INSTALL CITY FURNISHED PARKING LOT LIGHT STANDARD AS SHOWN.

= INSTALL CITY FURNISHED PEDESTRIAN LIGHT STANDARD AS SHOWN.

SCALE: 1" = 20'

0 5 10 20

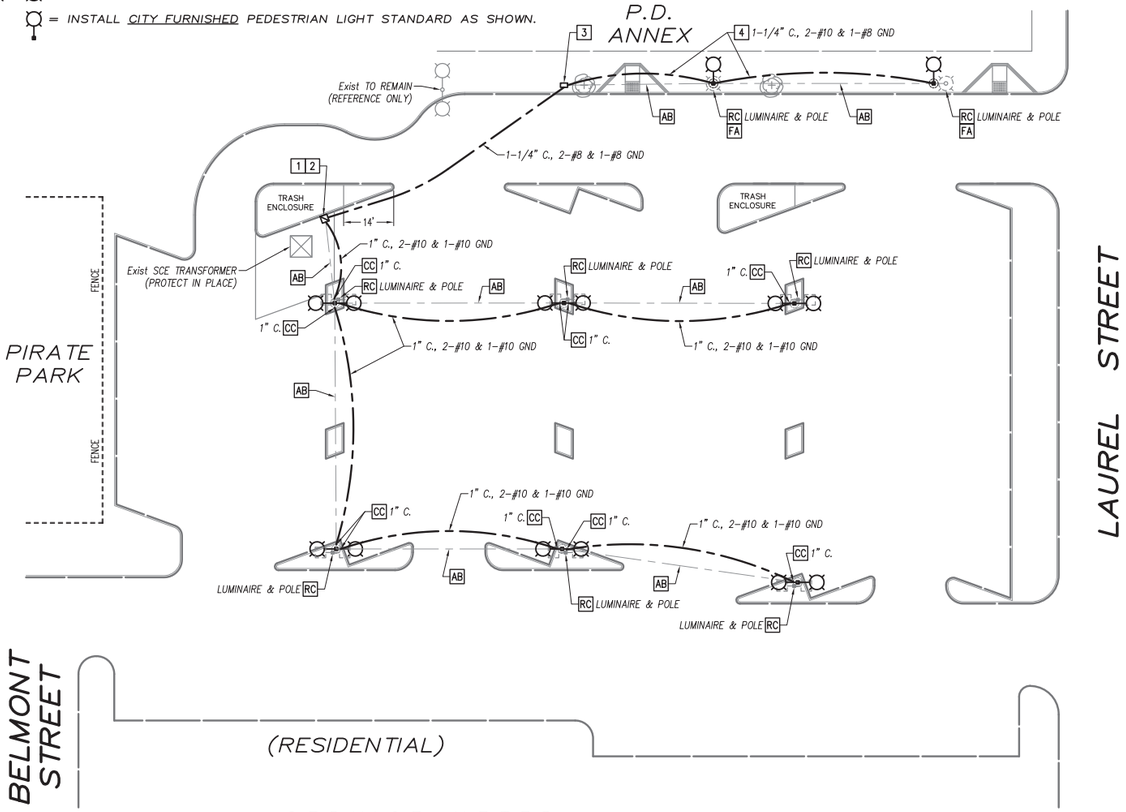

SERVICE METER

VOLTAGE/PHASE: 120V/240V, 1ø, 3W
BUS AMPS: 100A
MAIN BREAKER: 100A / 2P
MOUNTING: WALL
A.I.C. RATING: 42 KA

LOADS	SEE NOTE	LCL	OUTLETS LTG	OUTLETS REC	OUTLETS MISC	VOLT – AMPS A	VOLT – AMPS B	CKT	BKR/POLE	A	B	BKR/POLE	CKT	VOLT – AMPS A	VOLT – AMPS B	OUTLETS LTG	OUTLETS REC	OUTLETS MISC	LCL	SEE NOTE	LOADS
PARKING LOT	1	X	12	–	–	936		1	30 / 1	•		15 / 1	2	500		–	–	1	–	–	IRRIGATION
SIDEWALK	2	X	2	2	–		1800	3	30 / 1		•		4								
PEC	–	–	–	–	–	500		5	15 / 1	•			6								
								7			•		8								
								9		•			10								
								11			•		12								
								13		•			14								
								15			•		16								
								17		•			18								
								19			•		20								
								21		•			22								
								23			•		24								

TOTAL øA = 1,936 VOLT–AMPS
TOTAL øB = 1,800 VOLT–AMPS
LCL = 684 VOLT–AMPS
TOTAL PANEL = 4,420 VOLT–AMPS @ 240V, 1ø = 18.4 AMPS

NOTES:
1. PEC – ON; PEC – OFF
2. PEC – ON; TIME CLOCK – OFF
TIME SWITCH SHALL BE 7-DAY, TITLE 24 COMPLIANT

REGISTERED PROFESSIONAL ENGINEER MARK J. ESPOSITO No. C69921 Exp. 9-30-16 CIVIL STATE OF CALIFORNIA

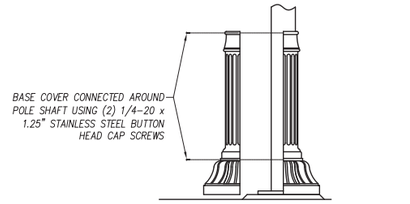

** NOTE: SOUTH COAST LIGHTING DECORATIVE BASE COVERS DESIGNED TO BE INSTALLED SO THAT BOTTOM OF DECORATIVE BASE IS LEVEL WITH BOTTOM OF POLE BASE PLATE; CONTRACTOR RESPONSIBLE FOR PROPER INSTALLATION AND GROUTING BETWEEN BOTTOM OF BASE COVER AND FINISH GRADE**

DETAIL 4
BASE COVER

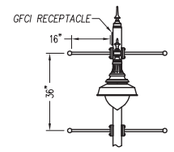

SECTION A–A

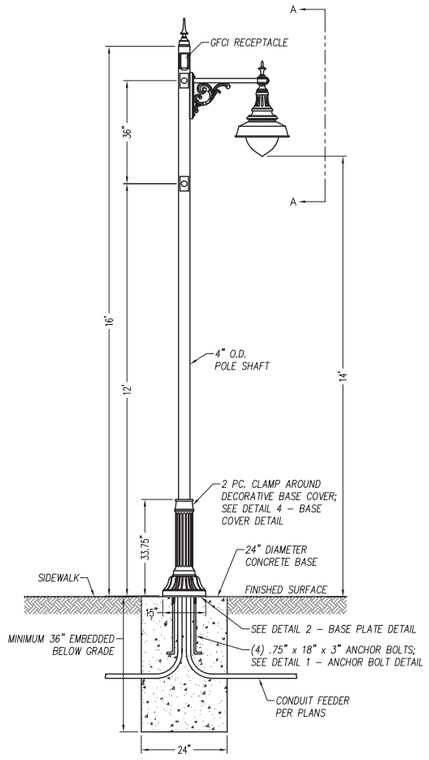

PEDESTRIAN LIGHT STANDARD
SOUTH COAST LIGHTING & DESIGN CATALOG No.: BCVIL1534/DS340-R400V120

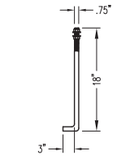

(4) .75" X 18" X 3" ANCHOR BOLTS WITH (2) HEX NUTS AND (2) FLAT WASHERS PER BOLT ASTM-A36 FULLY GALVANIZED PER ASTM A123

DETAIL 1
ANCHOR BOLT

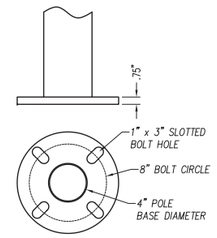

DETAIL 2
BASE PLATE

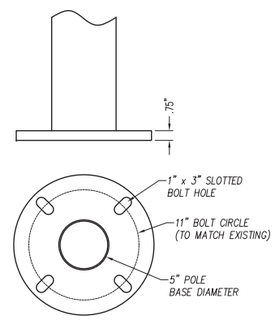

DETAIL 3
BASE PLATE

FINISH SPECIFICATIONS

* ALL STEEL ASSEMBLIES GALVANIZED TO ASTM-A123
* ALL WELDS IN ACCORDANCE WITH AWS WELDING CODE
* ENTIRE ASSEMBLY TO BE FINISH PAINTED VERDE GREEN
* ALL HARDWARE STAINLESS STEEL

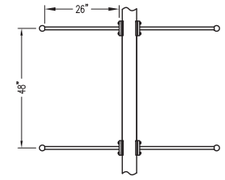

SECTION B–B

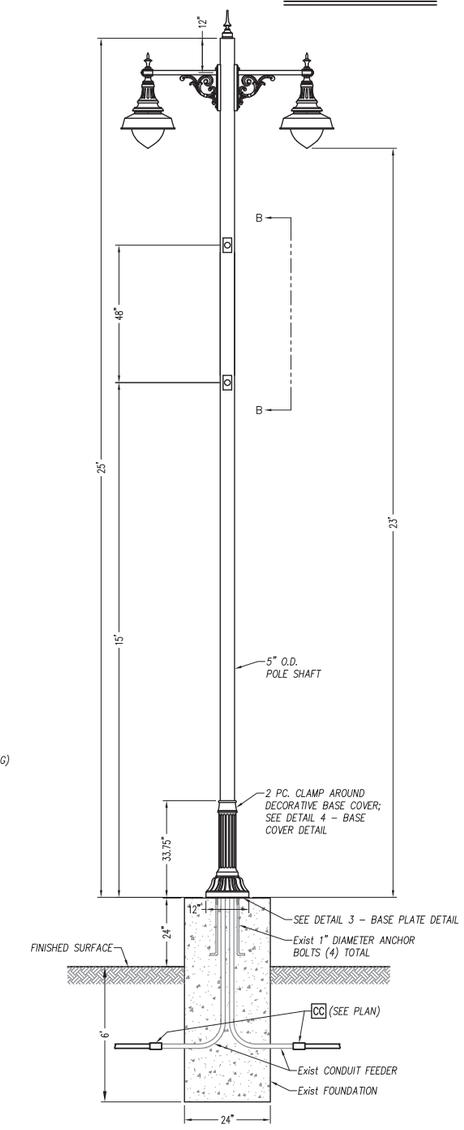

PARKING LOT LIGHT STANDARD
SOUTH COAST LIGHTING & DESIGN CATALOG No.: BCVIL1534/DS340-R500V250-TWIN

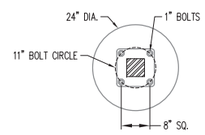

EXISTING FOUNDATION

NOTE:
CONTRACTOR SHALL VERIFY ORIENTATION OF EXISTING ANCHOR BOLTS RELATIVE TO POLE BASE PLATE PRIOR TO ORDERING POLES TO ENSURE PROPER FIXTURE ALIGNMENT.

HCI CAD FILE: LAUREL ST PARKING LOT_LIGHTING.dwg

Know what's below. Call before you dig.

UNAUTHORIZED CHANGES AND USES:
HARTZOG & CRABILL, INC. WILL NOT BE RESPONSIBLE FOR, OR LIABLE FOR, UNAUTHORIZED CHANGES TO OR USES OF THIS PLAN. ALL CHANGES TO THE PLAN MUST BE IN WRITING AND MUST BE APPROVED BY HARTZOG & CRABILL, INC.

REVISIONS

NUMBER	DATE	INITIALS	DESCRIPTION	APP'V'D

REFERENCES

HARTZOG & CRABILL, Inc.
Consulting Traffic Engineers
17852 East 17th Street, Suite 101
Tustin, California 92780
tel: (714) 731-9455 fax: (714) 731-9498
www.hartzog-crabill.com

PREPARED UNDER THE SUPERVISION OF:	DATE
Mark J. Esposito R.C.E. No. C69921 (Exp. 09-30-16)	6-19-15
DRAWN BY: D.M.	6-19-15
CHECKED BY: M.E.	6-19-15
DESIGNED BY: D.M.	6-19-15
APPROVED:	

LIGHTING PLAN
Parking District No. 1
b/t Belmont Street and Laurel Street

CITY OF BELLFLOWER

Sheet 1 of 2

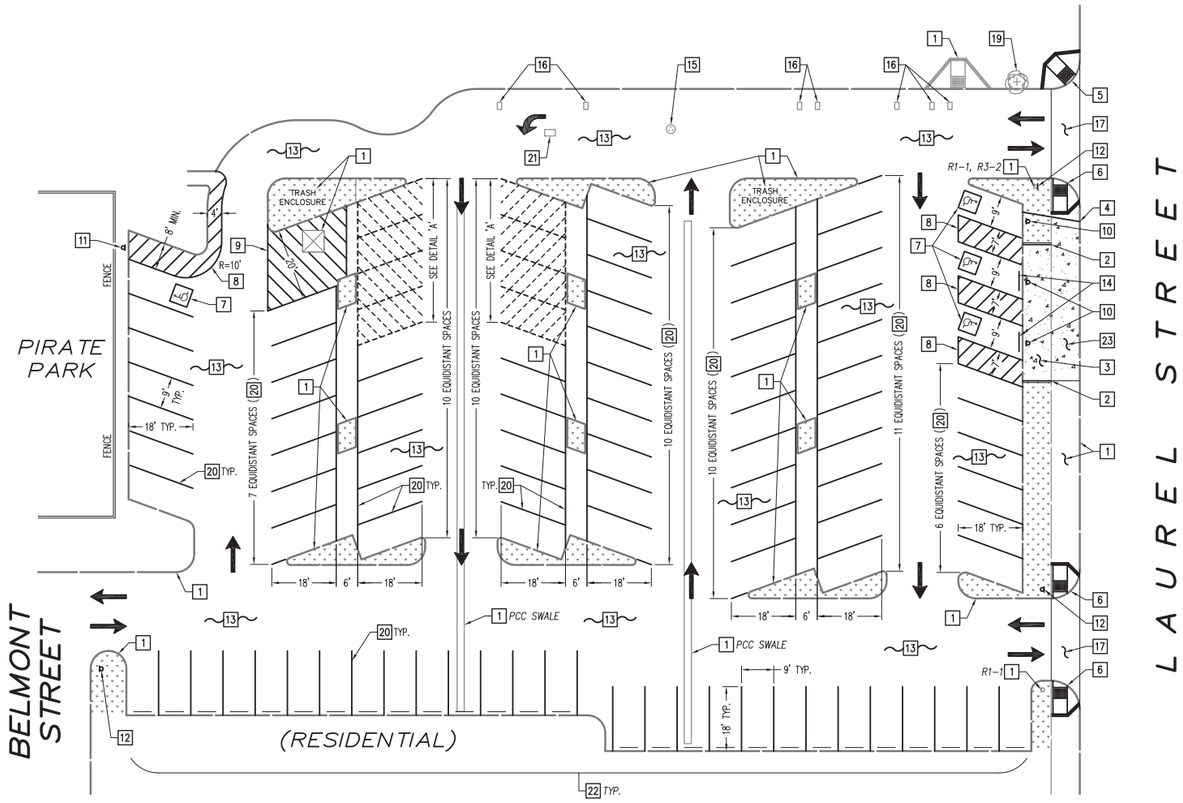

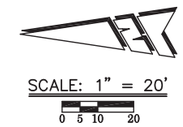

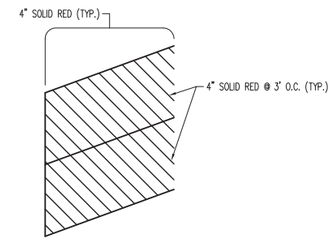

DETAIL 'A'
AUTHORIZED VEHICLES ONLY
(8 SPACES)
N.T.S.

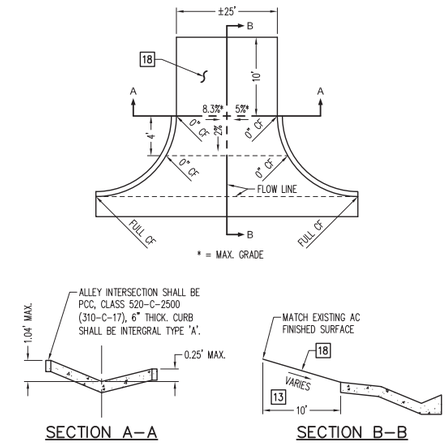

DETAIL 'B'
ALLEY INTERSECTION
N.T.S.

L E G E N D:

——— = PAINT 4" WHITE PARKING STALL STRIPES AS SHOWN.

--------- = PAINT 4" SOLID RED PARKING STALL STRIPES AS SHOWN.

= INSTALL THERMOPLASTIC TYPE IV(Lt) ARROW (AS SHOWN) PER STANDARD PLAN A24A.

= INSTALL THERMOPLASTIC TYPE I (10') ARROW (AS SHOWN) PER STANDARD PLAN A24A.

GENERAL NOTES:

1. ALL WORK SHALL CONFORM TO THE STANDARD SPECIFICATIONS FOR PUBLIC WORKS CONSTRUCTION, (2012), CITY OF BELLFLOWER STANDARD PLANS, STATE OF CALIFORNIA DEPARTMENT OF TRANSPORTATION STANDARD PLANS (2010) AND THE CALIFORNIA MANUAL OR UNIFORM TRAFIC CONTROL DEVICES (LATEST EDITION).
2. THE CONTRACTOR SHALL TELEPHONE THE CITY OF BELLFLOWER PUBLIC WORKS DEPARTMENT AT LEAST TWO WORKING DAYS (48 HOURS) PRIOR TO STARTING CONSTRUCTION AT (562) 804-1424 EXT. 2259.
3. IT SHALL BE THE CONTRACTOR'S RESPONSIBILITY TO ARRANGE FOR AND COORDINATE THE RELOCATION OF ANY EXISTING UTILITIES DEEMED NECESSARY BY THE PROPOSED IMPROVEMENT.
4. ALL FINISH SURFACES SHALL BE CONSTRUCTED TO MAINTAIN POSITIVE DRAINAGE.
5. BEFORE STARTING WORK THE CONTRACTOR SHALL OBTAIN A PERMIT FROM THE CITY OF BELLFLOWER, ENGINEERING DEPARTMENT (NO FEE).
6. HARD HATS AND ANSE COMPLIANT VESTS SHALL BE WORN AT ALL TIMES WHEN WORKING ON THIS PROJECT.
7. SAFETY IS STRESSED. ANY OPERATIONS OR SITUATION THAT THREATENS THE SAFETY OF WORKERS OR THE PUBLIC, INCLUDING IMPROPER TRAFFIC CONTROL, WILL CAUSE THE SUSPENSION OF WORK UNTIL CORRECTIONS ARE MADE, AND NO WORKING DAYS WILL BE ALLOWED.
8. AREAS ADJACENT TO THE CONSTRUCTION SITE SHALL BE KEPT CLEAN AT ALL TIMES. ALL SWEEPING PERFORMED BY CITY CREWS WILL BE CHARGED TO THE CONTRACTOR AT OVERTIME RATES.
9. CONTRACTOR SHALL SUBMIT TRAFFIC CONTROL PLANS AT CONTRACTOR'S EXPENSE FOR CITY'S REVIEW AND APPROVAL BEFORE CONSTRUCTION BEGINS.
10. CONTRACTOR SHALL INSTALL AND MAINTAIN CONSTRUCTION BMP'S TO PROTECT THE STORM DRAIN SYSTEM.
11. ALL STRIPING SHALL BE PAINTED WITH TWO (2) COATS OF PAINT.
12. TRUNCATED DOMES SHALL BE WET SET ARMORCAST DARK BLUE.

CONSTRUCTION NOTES:

1. PROTECT IN PLACE.
2. CONSTRUCT VARIABLE HEIGHT PCC CURB AS DIRECTED BY THE ENGINEER.
3. CONSTRUCT 4" PCC SIDEWALK. JOIN EXISTING BACK OF SIDEWALK. 2.0% MAX CROSS SLOPE. REMOVE AND DISPOSE EXISTING LANDSCAPE COMPLETE. PROTECT EXISTING IRRIGATION SYSTEM IN PLACE.
4. CONSTRUCT UNDER-SIDEWALK DRAIN PER A.P.W.A. STANDARD PLAN 150-3 N=1.
5. REMOVE EXISTING AND CONSTRUCT NEW CURB RAMP PER A.P.W.A. STANDARD PLAN 111-5; CASE 'A'; TYPE 1. CONCRETE COLOR TO MATCH EXISTING.
6. REMOVE EXISTING AND CONSTRUCT NEW CURB RAMP PER A.P.W.A. STANDARD PLAN 111-5; CASE 'D'; TYPE 2. CONCRETE COLOR TO MATCH EXISTING.
7. PAINT ISA MARKING PER CALTRANS STANDARD PLAN A90A, DETAIL 'A'.
8. PAINT DISABLED LOAD ZONE AND "NO PARKING" PER CALTRANS STANDARD PLAN A90A. LINES SHALL BE BLUE.
9. PAINT 4" WHITE DIAGONAL WHITE LINES AT 3' O.C.
10. INSTALL R99C(CA) SIGN AND POST PER CALTRANS STANDARD PLAN A90A. (BY OTHERS)
11. INSTALL R99C(CA) AND R7-8B SIGNS AND POST PER CALTRANS STANDARD PLAN A90A. (BY OTHERS)
12. INSTALL R100B(CA) SIGN AND POST, WHERE APPLICABLE, PER CALTRANS STANDARD PLAN A90A. (BY OTHERS)
13. REMOVE AND DISPOSE ASPHALT CONCRETE AND EXCESS DIRT COMPLETE. FINE GRIND AND APPLY WEED KILLER COMPLETE. RE-COMPACT NATIVE. CONSTRUCT 3" ASPHALT CONCRETE OVER 4" CRUSHED MISCELLANEOUS BASE.
14. PROVIDE AND INSTALL PCC WHEEL STOPS.
15. ADJUST TELECOMMUNICATIONS MANHOLE TO GRADE.
16. ADJUST WATER METER TO GRADE.
17. REMOVE AND DISPOSE EXISTING PCC ALLEY INTERSECTION COMPLETE AND CONSTRUCT NEW PCC ALLEY INTERSECTION PER DETAIL 'B'.
18. RE-GRADE NEW ASPHALT CONCRETE PAVEMENT OVER 10' TO MAKE NEW ALLEY INTERSECTION GRADE.
19. REMOVE EXISTING TREE COMPLETE. REMOVE 4" TOP SOIL AND FILL PLANTER WITH 4" PCC SIDEWALK COMPLETE. MATCH EXISTING COLOR.
20. PAINT 4" WHITE PARKING STALL MARKINGS.
21. ADJUST SCE VAULT TO GRADE.
22. REMOVE AND RE-INSTALL PCC WHEEL STOPS COMPLETE.
23. REMOVE, DISPOSE AND CONSTRUCT NEW PCC SIDEWALK. COLOR TO MATCH EXISTING.

REGISTERED PROFESSIONAL ENGINEER GERALD J. STOCK No. C052822 Exp. 12-31-16 CIVIL STATE OF CALIFORNIA

HCI CAD FILE: LAUREL ST PARKING LOT_STRIPING.dwg

UNAUTHORIZED CHANGES AND USES:
HARTZOG & CRABILL, INC. WILL NOT BE RESPONSIBLE FOR, OR LIABLE FOR, UNAUTHORIZED CHANGES TO OR USES OF THIS PLAN. ALL CHANGES TO THE PLAN MUST BE IN WRITING AND MUST BE APPROVED BY HARTZOG & CRABILL, INC.

REVISIONS

NUMBER	DATE	INITIALS	DESCRIPTION	APP'V'D

REFERENCES

HARTZOG & CRABILL, Inc.
Consulting Traffic Engineers
17852 East 17th Street, Suite 101
Tustin, California 92780
tel: (714) 731-9455 fax: (714) 731-9498
www.hartzog-crabill.com

PREPARED UNDER THE SUPERVISION OF:		DATE
R.C.E. No. 052822 (Exp. 12-31-16)		1-7-15
DRAWN BY:	D.M.	1-7-15
CHECKED BY:	M.E.	1-7-15
DESIGNED BY:	D.M.	1-7-15
APPROVED:		

PAVING, SIGNING AND STRIPING PLAN

Parking District No. 1
b/t Belmont Street and Laurel Street

CITY OF BELLFLOWER

Sheet 2 of 2