staff report

TO: Honorable Mayor and Members of the City Council

ATTENTION: Jeffrey L. Stewart, City Manager

FROM: Len Gorecki, Director of Public Works
Philip Wang, Associate Engineer

SUBJECT: Consideration and possible action to adopt Resolution No. 16-XX – A Resolution approving the plans and specifications for the Miscellaneous Concrete Improvements (Specifications No. 14/15-05), pursuant to Government Code §830.6, and establishing a project payment account; and authorize solicitation of bids.

DATE: September 12, 2016

EXECUTIVE SUMMARY

This action would approve the Plans and Specifications, preserve the City's right to assert design immunity to any claim for damages arising from the plan or design, and authorize the Public Works Department to advertise for bids for the Miscellaneous Concrete Improvements (Specifications No. 14/15-05). The award of a contract will be brought before the City Council at a later date for approval.

RECOMMENDATION TO CITY COUNCIL

1) Adopt Resolution No. 16-XX; or

2) Alternatively, discuss and take other action related to this item.

FISCAL IMPACT

The estimated cost for construction and contingency to perform the work under Specifications No. 14/15-05 is $450,000. Funds are available in Account Nos. 125-47050-9000 (Measure R Funds), 140-47050-9000 (State Gas Tax Funds), and 011-47250-9000 (City Hall General Fund Improvements).

DISCUSSION

This project consists of removal and replacement of damaged and non-ADA compliant concrete sidewalk, curb ramps, drive aprons, cross gutters, and other miscellaneous concrete improvements throughout the City. The areas scheduled for improvement were selected based on service requests, scheduled improvements, recommendations from the ADA Transition Plan, and other areas identified by Public Works staff in need of repair or reconstruction. Also included as part of this project, are plans for the installation of one new concrete bus pad on Alondra Boulevard.

The Plans and Specifications, and an engineer's estimate of construction costs, have been developed for the Miscellaneous Concrete Improvements. Upon City Council approval of the plans and specifications, staff will solicit bids for the construction of the improvements.

CEQA

Pursuant to the California Environmental Quality Act (CEQA) (Public Resources Code §§ 21000, et seq.) and CEQA Guidelines (California Code of Regulations, Title 14, §§ 15000, et seq.), the City conducted an environmental assessment. This project is categorically exempt from additional environmental review pursuant to CEQA Guidelines § 15301 (Existing Facilities).

ATTACHMENTS

Resolution No. 16-XX 3
Plans and Specifications 6

CITY OF BELLFLOWER

RESOLUTION NO. 16-XX

A RESOLUTION APPROVING THE PLANS AND SPECIFICATIONS FOR THE MISCELLANEOUS CONCRETE IMPROVEMENTS (SPECIFICATIONS NO. 14/15-05), PURSUANT TO GOVERNMENT CODE §830.6, AND ESTABLISHING A PROJECT PAYMENT ACCOUNT; AND AUTHORIZE SOLICITATION OF BIDS

THE CITY COUNCIL RESOLVES AS FOLLOWS:

SECTION 1. The City Council finds and declares as follows:

A. Public Works Department staff prepared the plans and specifications for the Miscellaneous Concrete Improvements ("Project");

B. The Public Works Director reviewed the completed plans and specifications for the Project and agrees that the plans and specifications are complete and the Project may be completed;

C. The City Council wishes to obtain the immunities set forth in Government Code §830.6 with regard to the plans and specifications and completion of the Project; and

D. The City reviewed the project's environmental impacts under the California Environmental Quality Act (Public Resources Code §§ 21000, et seq., "CEQA") and the regulations promulgated thereunder (14 Cal. Code of Regulations §§15000, et seq., the "CEQA Guidelines"). The Project is categorically exempt from additional environmental review pursuant to CEQA Guidelines § 15301 (Existing Facilities).

SECTION 2. Design Immunity; Authorization.

A. The plans and specifications for the Project are determined to be consistent with the City's standards and are approved.

B. The plans and specifications approval set forth in this Resolution occurred before actual work on the Project construction commenced.

C. The approval granted by this Resolution conforms to the City's General Plan.

D. The Public Works Director, or designee, is authorized to act on the City's behalf in approving any alterations or modifications of the plans and specifications approved by this Resolution.

E. The approval and authorization granted by this Resolution is intended to avail the City of the immunities set forth in Government Code §830.6.

SECTION 3. Project Payment Account. For purposes of the Contract Documents administering the Project, the City Council directs the City Manager, or designee, to establish a fund containing sufficient monies from the current fiscal year budget to pay for the Project ("Project Payment Account"). The Project Payment Account is the sole source of funds available for the Contract Sum, as defined in the Contract Document administering the Project.

SECTION 4. The City Council of the City of Bellflower hereby appoints and directs the City Manager, or his designated representative, as agent of the City, to conduct all negotiations and execute and submit all necessary documents for the expeditious completion of the project.

SECTION 5. This Resolution does not affect any penalty, forfeiture, or liability incurred before, or preclude prosecution and imposition of penalties for any violation occurring before, this Resolution's effective date. Any such amended part will remain in full force and effect for sustaining action or prosecuting violations occurring before the effective date of this Resolution.

SECTION 6. If any part of this Resolution or its application is deemed invalid by a court of competent jurisdiction, the City Council intends that such invalidity will not affect the effectiveness of the remaining provisions or applications and, to this end, the provisions of this Resolution are severable.

SECTION 7. To the extent that any other resolution pertaining to the approval of plans and specifications for the Miscellaneous Concrete Improvements (Specifications No. 14/15-05) is incorporated into this Resolution, it is superseded in its entirety.

SECTION 8. The City Manager will establish policies and procedures as necessary to carry out this policy.

SECTION 9. The Mayor, or presiding officer, is hereby authorized to affix his signature to this Resolution signifying its adoption by the City Council of the City of Bellflower and the City Clerk, or her duly appointed deputy, shall attest thereto.

<u>SECTION 10</u>. This Resolution will become effective immediately upon adoption.

PASSED, APPROVED, AND ADOPTED BY THE CITY COUNCIL OF THE CITY OF BELLFLOWER ON THIS ____ DAY OF _____ 2016.

_____
Dan Koops, Mayor

ATTEST:

_____
Mayra Ochiqui, City Clerk

APPROVED AS TO FORM:

_____
Karl H. Berger, City Attorney

CITY OF BELLFLOWER

BELLFLOWER, CALIFORNIA

PLANS
SPECIFICATIONS
AND CONTRACT DOCUMENTS
FOR THE

MISCELLANEOUS CONCRETE IMPROVEMENTS

SPECIFICATIONS NO. 14/15-05

PREPARED BY:

CITY OF BELLFLOWER
PUBLIC WORKS DEPARTMENT
16600 CIVIC CENTER DRIVE
BELLFLOWER, CALIFORNIA 90706
(562) 804-1424

For questions regarding these Bid Specifications or project, please contact:
Project Manager: Philip Wang, PE
(562) 804-1424, ext. 2254

BIDS DUE: _____

These plans and specifications are the exclusive property of the City of Bellflower and shall not be used in any manner without prior consent of the City of Bellflower. Any reuse of these plans and specifications by others shall be at other's sole risk and without liability to the City of Bellflower.

CITY OF BELLFLOWER

MISCELLANEOUS CONCRETE IMPROVEMENTS

SPECIFICATIONS NO. 14/15-05

TABLE OF CONTENTS

SECTION **PAGE**

NOTICE INVITING SEALED BIDS N-1

BIDDING INSTRUCTIONS I-1

BID DOCUMENTS ***(All Bid Documents must be submitted by bid date)***
Bid B-1
Bidders Information B-2
Bidder's Statement of Past Contract Disqualifications B-3
Insurance Requirements B-5
List of Subcontractors B-6
Project Bid Sheet B-7
Bid Bond B-10
Non Collusion Declaration B-11

CONTRACT DOCUMENTS
Agreement C-1
Faithful Performance Bond FPB-1
Labor and Materials Bond ..... L&MB-1
Worker's Compensation Insurance Certificate WC-1
Declaration of Sufficiency of Funds DSF-1

GUARANTY G-1

GENERAL PROVISIONS GP-1

TECHNICAL PROVISIONS TP-1

California Labor Code Section 2810 ..... ATTACHED

FINAL CLOSEOUT AGREEMENT AND RELEASE OF ALL CLAIMS ..... ATTACHED

NOTICE INVITING SEALED BIDS
FOR THE MISCELLANEOUS CONCRETE IMPROVEMENTS

IN THE CITY OF BELLFLOWER
SPECIFICATIONS NO. 14/15-05

The City of Bellflower is accepting sealed bids in the City Clerk's office, 16600 Civic Center Drive, Bellflower, CA 90706, until 11:00 a.m. on:

TUESDAY, _____

at which time they will be publicly opened. Each bid must be accompanied by a certified or cashier's check or bidder's bond payable to the order of the City of Bellflower or cash for an amount not less than ten percent (10%) of the bid price submitted, and the check, bond, or cash deposit of the successful bidder shall be forfeited to the City if such bidder fails to enter into the contract to perform the work within ten (10) days after written notice of award. Bids will not be accepted after that time.

As described in the Bidding Documents, the bids are for a public works project ("Project") which consists of Miscellaneous Concrete Improvements and related work as shown on the plans on file with the City's Public Works Department. The Engineer's Estimate of cost is $450,000. Bids will be publicly opened on _____. At the time of contract award, the contractor shall possess a Class A or C-8 Contractor's License. No bid will be accepted from a contractor who has not been licensed in accordance with the Provisions of Chapter 9, Division III, of the Business and Professions Code of the State of California at the time the bid is submitted. Following Notice to Proceed, the contractor shall have forty (40) working days to complete the work.

Work on the Project must be performed in strict conformity with Specification No. _____ as adopted by the City's City Council on _____, 20___ which is filed with the City's Public Works Department. Copies of these plans and specifications may be obtained by prospective bidders from the Public Works Department, 16600 Civic Center Drive, Bellflower, CA 90706 for a non-refundable fee of $35.00. Plans and specifications can be mailed for an additional non-refundable fee of $10.00 per set.

Mandatory jobsite walk will be held at TIME, DATE at 16600 Civic Center Drive, Bellflower, CA 90706. Prospective bidders will have opportunity to examine the project site and are encouraged to raise any questions associated with the project and site. Attendance of the jobsite walk is mandatory for parties wishing to submit a bid as the Prime Contractor.

The terms and conditions for bidding on the Project are described in the Bidding Instructions which can be found at www.bellflower.org.

This project requires payment of State prevailing rates of wages for Los Angeles County. The contractor must post copies of the prevailing schedule at each job site.

Copies of these rates of wages are available from the State of California Department of Industrial Relations Prevailing Wage Unit, Telephone No. (415) 703-4774. The website for this agency is currently located at www.dir.ca.gov.

Note that the Project is subject to compliance monitoring and enforcement by the California Department of Industrial Relations. Pursuant to California law, the City must find bids failing to comply with all applicable Labor Code requirements including, without limitation, Labor Code §§ 1725.5 and 1771.4, to be nonresponsive.

Five percent (5%) will be deducted from each progress payment and retained by the City. The remainder less the amount of all previous payments will be paid to the Contractor. Pursuant to Public Contracts Code ("PCC") § 22300, the Contractor may substitute securities for retention monies held by the City or request that the City place such monies into an escrow account. The Contractor is notified, pursuant to PCC § 22300, any such election will be at the Contractor own expense and will include costs incurred by the City to accommodate the Contractor's request.

DATED this ___ day of _____, 20__.

CITY OF BELLFLOWER, CALIFORNIA

CITY OF BELLFLOWER

MISCELLANEOUS CONCRETE IMPROVEMENTS

SPECIFICATIONS NO. 14/15-05

BIDDING INSTRUCTIONS

1 **DEFINITIONS**. Unless provided otherwise, the definitions in the Greenbook, Special Conditions, or other Contract Documents are applicable to all Bidding Documents.

1.1 "Addenda" means written or graphic instruments issued by the City before the Bid Deadline that modify or interpret the Bidding Documents by additions, deletions, clarifications, or corrections.

1.2 "Alternate" means a proposed change in the Work, as described in the Bidding Documents which, if accepted, may result in a change to either the Contract Sum or the Contract Time, or both.

1.3 "Bid Deadline" means the date and time designated in the Notice for Bids as the last date and time for receipt of Bids, as may be revised by Addenda.

1.4 "Bidder" means a person or firm that submits a Bid.

1.5 "Bidding Documents" means the construction documents prepared and issued for bidding purposes including all Addenda.

1.6 "Lump Sum Base Bid" means the sum stated in the Bid for which Bidder offers to perform the Work described in the Bidding Documents, but not including unit price items or Alternates.

1.7 "Unit Price" means an amount stated in the Bid for which Bidder offers to perform the Unit Price Work for a fixed price per unit of measurement.

2 **BIDDER'S REPRESENTATIONS.** By making its Bid, Bidder represents that:

2.1 Bidder read, understood, and made the Bid pursuant to the requirements in the Bidding Documents.

2.2 Bidder visited the Project site and is familiar with the conditions under which the Work will be performed and the local conditions as related to the Contract Documents.

2.3 The Bid is based upon the materials, equipment, and systems required by the Bidding Documents.

2.4 Bidder and all Subcontractors, regardless of tier, have the appropriate current licenses issued by the State of California Contractor's State License Board for

the Work to be performed. If Bidder is a joint venture, the Bidder will have a joint venture license appropriate for the performance of the work, and each member of the joint venture will likewise have the appropriate license. Business and Professions Code §§ 7000-7191 establish licensing requirements for contractors. If a Bidder, that is a specialty contractor, submits a Bid involving 3 or more specialized building trades, the work of which is more than incidental and supplemental to the performance of the Work for which Bidder holds a specialty contractor license, Bidder must also hold either (1) a specialty contractor "C" license in each such trade, (2) a General Engineering contractor "A" license, or (3) a General Building contractor "B" license. This requirement is applicable whether or not Bidder lists a Subcontractor for each such trade.

2.5 If licensure or proper licensure is controverted, then proof of licensure pursuant to this section must be made by production of a verified certificate of licensure from the Contractors' State License Board which establishes that the individual or entity bringing the action was duly licensed in the proper classification of contractors at all times during the performance of any act or contract covered by the action. Nothing in this subdivision requires any person or entity controverting licensure or proper licensure to produce a verified certificate. When licensure or proper licensure is controverted, the burden of proof to establish licensure or proper licensure is on the licensee.

2.6 Bidder has the expertise and financial capacity to perform and complete all obligations under the Bidding Documents.

2.7 The person executing the Bid Form is duly authorized and empowered to execute the Bid Form on Bidder's behalf.

2.8 Bidder is aware of and, if awarded the Contract, will comply with Applicable Code Requirements in its performance of the Work.

2.9 The Bidder has paid the City's business license fee(s).

3 BIDDING DOCUMENTS.

3.1 Bidders may obtain complete sets of the Bidding Documents from the City's Public Works Department for the sum stated in the Notice for Bids.

3.2 Bidders will use a complete set of Bidding Documents in preparing Bids.

3.3 The City makes copies of the Bidding Documents available, on the above terms, for the sole purpose of obtaining Bids for the Work and does not confer a license or grant permission for any other use of the Bidding Documents.

4 INTERPRETATION OR CORRECTION OF BIDDING DOCUMENTS.

4.1 Before submitting its Bid, Bidder will carefully study and compare the various documents comprising the Bidding Documents and compare them with any other work being bid concurrently or presently under construction which relates to the Work for which the Bid is submitted; will examine the Project site, the conditions under which the Work is to be performed, and the local conditions; and will at

once report to the City's Representative errors, inconsistencies, or ambiguities discovered.

4.2 Requests for clarification or interpretation of the Bidding Documents will be addressed to the City's Representative and must be received at least seven (7) days prior to the date of receipt of bids. No request shall be taken within the six (6) days prior to bid opening.

4.3 Clarifications, interpretations, corrections, and changes to the Bidding Documents will be made by Addenda. Clarifications, interpretations, corrections, and changes to the Bidding Documents made in any other manner will not be binding and Bidders will not rely upon them.

5 **PRODUCT SUBSTITUTIONS**. No substitutions will be considered before award of Contract. Substitutions will only be considered after award of the Contract and as provided for in the Contract Documents.

6 **SUBCONTRACTORS.**

6.1 Each Bidder will list in the Bid Form all first-tier Subcontractors that will perform work, labor or render such services. The Bid Form contains spaces for the following information when listing Subcontractors: (1) Work Activity; (2) name of Subcontractor; (3) city of Subcontractor's business location. Failure to list any of these items on the Bid Form will result in the City treating the Bid as if no Subcontractor was listed for the Work and that Bidder represents to the City that it is fully qualified to perform that portion of the Work and will perform do so.

6.2 Subcontractors listed in the Bid Form will only be substituted after the Bid Deadline with the City's written consent in accordance with California law.

7 **ADDENDA.**

7.1 Addenda will be in writing and issued only by the City. Addenda will be mailed or delivered to all who are known by the City to have received a complete set of Bidding Documents and who have provided a street address for receipt of Addenda.

7.2 Copies of Addenda will be made available for inspection at the City's Public Works Department.

7.3 The City will issue Addenda so that they are received by prospective Bidders not later than three (3) business days before the Bid Deadline. Addenda that withdraw the request for Bids or postpone the Bid Deadline may be issued any time before the Bid Deadline.

7.4 Each Bidder is responsible for ensuring that it has received all issued Addenda before issuing a Bid.

8 **PRE-BID CONFERENCE**. Bidder will attend a Pre-Bid Conference where the City will discuss the Bidding Documents, answer questions, accept comments, and conduct a Project site visit. The City requires all Pre-Bid Conference attendees to

arrive for the meeting on time and to sign an attendance list which is used to determine if Bidders meet this requirement. Any Bidder not attending the Pre-Bid Conference in its entirety will be deemed to have not complied with the requirements of the Bidding Documents and its Bid will be rejected.

9 FORM AND STYLE OF BIDS

9.1 Bids will be submitted on the Bid Form included with the Bidding Documents. Bids not submitted on the City's Bid Form will be rejected.

9.2 All blanks on the Bid Form will be filled in legibly in ink or by typewriter.

9.3 Bidder's failure to submit a price for any Alternate or unit price will result in the Bid being considered as nonresponsive. If Alternates are called for and no change in the Lump Sum Base Bid is required, enter "No Change."

9.4 Each Bidder must fill out the "Bidders Statement of Past Contract Disqualifications" form stating any and all instances of contract disqualifications due to a violation of a law or safety regulation. The Bidder must explain the circumstances of each disqualification. The City may reject the bid based on such information.

9.5 Bidder will make no stipulations on the Bid Form nor qualify the Bid in any manner.

9.6 The Bids will be based upon full completion of all the Work as shown on the plans and specifications. It is expressly understood that the plans are drawn with as much accuracy as is possible in advance, but should errors, omissions or discrepancies exist in the plans which show conditions that vary from those encountered in construction, the Bidder (if awarded the Contract) specifically agrees to construct a completed work ready for the use and in the manner which is intended. In the event of increasing or decreasing of work, the total amount of work actually done or materials or equipment furnished must be paid for according to the unit or lump sum price established for such work under the contract, wherever such unit or lump sum price has been established. In the event no prices are named in the contract to cover such changes or alterations, the cost of such changes must be covered as extra work.

9.7 The Bid Form will be signed by a person or persons legally authorized to bind Bidder to a contract. Bidder's Representative will sign and date the Declaration included in the Bid Form. Failure to sign and date the declaration will cause the Bid to be rejected.

10 BID SECURITY

10.1 Each Bid will be accompanied by Bid Security, in the amount of 10% of the Lump Sum Base Bid as security for Bidder's obligation to enter into a Contract with the City on the terms stated in the Bid Form and to furnish all items required by the Bidding Documents. Bid Security will be a Bid Bond on the form provided by the City or a certified check made payable to "City of Bellflower." When a

Bond is used for Bid Security, failure to use the City's Bid Bond form will result in the rejection of the Bid.

10.2 If the apparent lowest responsible Bidder fails to sign the Agreement and furnish all items required by the Bidding Documents within the time limits specified in these Instructions to Bidders, the City will disqualify such Bidder and select the next apparent lowest responsible Bidder until all bids have been exhausted or the City may reject all bids. In such an event, the disqualified Bidder will be liable for and forfeit to the City the amount of the difference, not to exceed the amount of the Bid Security, between the amount of the disqualified Bid and the larger amount for which the City procures the Work.

10.3 If a Bid Bond is submitted and an attorney-in-fact executes the Bid Bond on behalf of the surety, a notarized and current copy of the power of attorney will be affixed to the Bid Bond. The surety issuing the Bid Bond will be listed in the latest published State of California, Department of Insurance list of, "Insurers Admitted to Transact Surety Insurance in This State."

10.4 The City will retain Bid Security until the occurrence of one of the following:

10.4.1 All items required by the Bidding Documents have been furnished and the Agreement has been signed by the successful Bidder and the City.

10.4.2 The specified time has elapsed during which Bids may be withdrawn.

10.4.3 All Bids have been rejected.

10.5 The Bid Form, Bid Security, and all other documents required to be submitted with the Bid will be enclosed in a sealed opaque envelope. The envelope will be addressed to the City Clerk. The envelope will be identified with the Project name, Bidder's name and address, and, if applicable, the designated portion of the Project for which the Bid is submitted. If the Bid is sent by mail, the sealed envelope will be enclosed in a separate mailing envelope labeled as follows: "SEALED BID ENCLOSED."

10.6 Bids will be deposited at the designated location on or before the Bid Deadline. A Bid received after the Bid Deadline will be returned to Bidder unopened.

10.7 Bidder will assume full responsibility for timely delivery at the location designated for receipt of Bids.

10.8 Oral, telephonic, facsimile, or telegraphic Bids are invalid and will not be accepted.

11 **MODIFICATION OR WITHDRAWAL OF BID**.

11.1 Before the Bid Deadline, a submitted Bid may be modified or withdrawn. Notice of such action will be given to the City in writing and signed by the

Bidder's authorized representative. A change so made will be so worded as not to reveal the amount of the original Bid.

11.2 A withdrawn Bid may be resubmitted up to the Bid Deadline, provided that it then fully complies with the Bidding Requirements.

11.3 Bid Security will be in an amount sufficient for the Bid as modified or resubmitted.

11.4 Bids may not be modified, withdrawn, or canceled within sixty (60) days after the Bid Deadline unless otherwise provided in Supplementary Instructions to Bidders.

12 **OPENING OF BIDS**. Bids submitted in the manner required by these instructions and are received on or before the Bid Deadline will be opened publicly.

13 **REJECTION OF BIDS.**

13.1 The City will have the right to reject all Bids.

13.2 The City will have the right to reject any Bid not accompanied by the required Bid Security or any other item required by the Bidding Documents, or a Bid which is in any other way materially incomplete or irregular.

14 **AWARD**

14.1 The City may retain all bids for a period of sixty (60) days for examination and comparison, and to delete any portion of the work from the contract.

14.2 The City will have the right to waive nonmaterial irregularities in a Bid and to accept the lowest responsive Bid as determined by The City.

14.3 The City will have the right to accept Alternates in any order or combination, unless otherwise specifically provided in the Bidding Documents.

14.4 The City will determine the low Bidder on the basis of the sum of the Lump Sum Base Bid plus all unit prices multiplied by their respective estimated quantities as stated in the Bid Form, if any, plus the Contractor Delay Damages multiplied by the "multiplier" as stated in the Bid Form, plus the amounts of all accepted Alternates.

14.4.1 Inclusion of Contractor Delay Damages within the Bid Form is solely for the purpose of determining the low bidder and establishing the City's maximum daily liability as a result of City delays to Contractor, if any, and City has no obligation to pay any daily Contractor Delay Damages except as provided for in these Contract Documents for Compensable Delays. In the event that City becomes liable to Contractor for compensable delays, City agrees to pay Contractor the daily Contractor Delay Damages set forth in the Proposal Form or Contractor's actual daily delay damages, whichever is less, for each day of Compensable Delay as provided for by these Contract Documents.

14.5 The City will select the apparent lowest responsive and responsible Bidder and notify such Bidder within thirty (30) days (unless number of days is modified in Supplementary Instructions to Bidders) after the Bid Deadline or reject all bids. Within ten (10) days after receiving the City's notice that Bidder was selected as the apparent lowest responsible Bidder, Bidder will submit to the City all of the following items:

14.5.1 Two originals of the Agreement signed by Bidder.

14.5.2 Two originals of the Labor and Materials Bond.

14.5.3 Two originals of the Faithful Performance Bond.

14.5.4 Certificates of Insurance.

14.5.5 Names of all Subcontractors, with their addresses, telephone number, facsimile number, trade on Bidders' company stationery. Evidence, as required by the City, of the reliability and responsibility of the proposed Subcontractors such as statements of experience, statements of financial condition, and references.

14.5.6 Preliminary Contract Schedule.

14.5.7 Selection of Retention Options and Escrow Agreement for Deposit of Securities in Lieu of Retention and Deposit of Retention. If not submitted, the City will withhold retention.

14.5.8 Cost Breakdown.

14.6 Before award of the Contract, the City will notify Bidder in writing, if the City objects to a Subcontractor proposed by Bidder, in which case Bidder will propose a substitute acceptable to the City. Failure of the City to object to a proposed Subcontractor before award will not preclude the City from requiring replacement of any Subcontractor based upon information received subsequent to award, information which cannot be properly evaluated before award due to time constraints, or information relating to a failure to comply with the requirements of the Contract.

14.7 If Bidder submits the two original signed Agreements and all other items within ten (10) days after receiving the City's notification, and all such items comply with the requirements of the Bidding Documents, the City will award the Contract to Bidder by signing the Agreement and returning a signed copy of the Agreement to Bidder.

14.8 If the City consents to the withdrawal of the Bid of the apparent lowest responsible Bidder, or the apparent lowest responsible Bidder fails or refuses to sign the Agreement or submit to the City all of the items required by the Bidding Documents, within ten (10) days after receiving the City's notification, or the City determines that the Bidder is not financially or otherwise qualified to perform the Contract, the City may reject such Bidder's Bid and select the next apparent lowest responsible Bidder, until all bids are exhausted, or reject all Bids.

BID

BID TO: CITY OF BELLFLOWER, CALIFORNIA

The undersigned Bidder proposes and agrees, if this Bid is accepted, to enter into an Agreement with the City in the form included in the Contract Documents to perform the Work as specified or indicated in said Contract Documents entitled:

FOR CONSTRUCTION OF
MISCELLANEOUS CONCRETE IMPROVEMENTS
IN THE CITY OF BELLFLOWER
SPECIFICATION NO. 14/15-05

Bidder accepts all of the terms and conditions of the Contract Documents, including without limitation those in the Notice Inviting Bids and the Instructions to Bidders dealing with the disposition of the Bid Security.

This Bid will remain open for the period stated in the Notice Inviting Bids, unless otherwise required by law. Bidder will enter into an Agreement within the time and in the manner required in the Instructions to Bidders, and will furnish the insurance certificates, Payment Bond, Performance Bond, and all Permits required by the Contract Documents.

Bidder has examined copies of all the Contract Documents, including the following Addenda (receipt of which is hereby acknowledged):

Number _____ Date _____

Number _____ Date _____

Number _____ Date _____

Number _____ Date _____

Bidder has familiarized itself with the nature and extent of the Contract Documents, the Work, the site, the locality where the Work is to be performed, the legal requirements (federal, state, and local laws, ordinances, rules, and regulations), and the conditions affecting cost, progress, or performance of the Work, and has made such independent investigations as Bidder deems necessary.

In conformance with the current statutory requirements of Labor Code § 1860, *et seq*., the undersigned confirms the following as its certification:

> I am aware of Labor Code § 3700, which require every employer to be insured against liability for worker's compensation, or to undertake self-insurance in accordance with the provisions, before commencing the performance of the Work of this Contract.

To all the foregoing, and including all Bid Schedule(s), List of Subcontractors, Non-collusion Affidavit, Bidder's General Information, and Bid Bond contained in these Bid Forms, said Bidder further agrees to complete the Work required under the Contract Documents within the Contract Time stipulated in said Contract Documents, and to accept in full payment therefor the Contract Price based on the Lump Sum or Unit Bid Price(s) named in the aforementioned Bidding Schedule(s).

Dated: _____ Bidder: _____

By: _____
(Signature)

Title: _____

BIDDER'S GENERAL INFORMATION

The Bidder shall furnish the following information. Failure to complete all Items will cause the Bid to be non-responsive and may cause its rejection. Additional sheets may be attached as required.

1. BIDDER/CONTRACTOR'S Name and Street Address:

_____

_____

_____

2. CONTRACTOR'S Telephone Number: ( ) _____
   Facsimile Number: ( ) _____
   Email address: _____

3. CONTRACTOR'S License: Primary Classification _____
   State License Number(s) _____
   Supplemental License Classifications_____
   Department of Industrial Relations (DIR) Registration No. _____

4. Surety Company and Agent who will provide the required Bonds on this Contract:
   Name of Surety_____
   Address _____
   _____
   _____
   Surety Company Agent _____
   Telephone Numbers: Agent ( )_____ Surety ( ) _____

5. Type of Firm (Individual, Partnership or Corporation): _____

6. Corporation organized under the laws of the State of: _____

7. List the names and addresses of the principal members of the firm or names and titles of the principal officers of the corporation or firm:

   _____ _____
   _____ _____
   _____ _____
   _____ _____

BIDDER'S GENERAL INFORMATION (Continued)

8. Number of years experience as a contractor in this specific type of construction work: _____

9. List at least three related projects of comparable size and complexity completed to date:

1. Owner _____ Address _____
   Contact _____ Class of Work _____
   Phone (_____)_____ Contract amount _____
   Project (_____)_____ Date completed _____

2. Owner _____ Address _____
   Contact _____ Class of Work _____
   Phone (_____)_____ Contract amount _____
   Project (_____)_____ Date completed _____

3. Owner _____ Address _____
   Contact _____ Class of Work _____
   Phone (_____)_____ Contract amount _____
   Project (_____)_____ Date completed _____

10. List the name and title of the person who will supervise full-time the proposed work for your firm:

_____

11. Is full-time supervisor an employee _____ contract services _____?

12. A financial statement or other information and references sufficiently comprehensive to permit an appraisal of your current financial condition may be required by the Engineer.

13. Name of the person who inspected the site of the proposed Work for the bidder:

Name: _____ Date of Inspection: _____

MISCELLANEOUS CONCRETE IMPROVEMENTS

BIDDER'S STATEMENT OF PAST CONTRACT DISQUALIFICATIONS

Please state all instances of being disqualified, removed, or otherwise prevented from bidding on, or completing, a federal, state, or local government project due to a violation of a law or safety regulation.

1. Have you ever been disqualified from any government contract?

   Yes ☐ No ☐

2. If yes, explain the circumstances:

_____
_____
_____
_____
_____
_____
_____
_____
_____
_____
_____
_____
_____
_____
_____
_____
_____
_____
_____
_____

_____
Bidder's Signature

INSURANCE REQUIREMENTS
[MUST BE SUBMITTED WITH PROJECT PROPOSAL]

To be awarded this contract, the successful bidder must procure and maintain the following types of insurance with coverage limits complying, at a minimum, with the limits set forth below:

Type of Insurance	Limits
Commercial general liability:	$3,000,000
Business automobile liability	$1,000,000
Workers compensation	Statutory requirement.

Commercial general liability insurance must meet or exceed the requirements of ISO-CGL Form No. CG 00 01 11 85 or 88. The amount of insurance set forth above must be a combined single limit per occurrence for bodily injury, personal injury, and property damage for the policy coverage. Liability policies must be endorsed to name the City, its officials, and employees as “additional insureds” under said insurance coverage and to state that such insurance will be deemed “primary” such that any other insurance that may be carried by the City will be excess thereto. Such endorsement must be reflected on ISO Form No. CG 20 10 11 85 or 88, or equivalent. Such insurance must be on an “occurrence,” not a “claims made,” basis and will not be cancelable or subject to reduction except upon thirty (30) days prior written notice to the City.

Automobile coverage must be written on ISO Business Auto Coverage Form CA 00 01 06 92, including symbol 1 (Any Auto).

The Consultant must furnish to the City duly authenticated Certificates of Insurance evidencing maintenance of the insurance required under this Agreement, endorsements as required herein, and such other evidence of insurance or copies of policies as may be reasonably required by the City from time to time. Insurance must be placed with admitted insurers with a current A.M. Best Company Rating equivalent to at least a Rating of “A:VII.” Certificate(s) must reflect that the insurer will provide thirty (30) day notice of any cancellation of coverage. The Consultant will require its insurer to modify such certificates to delete any exculpatory wording stating that failure of the insurer to mail written notice of cancellation imposes no obligation, and to delete the word “endeavor” with regard to any notice provisions.

By signing this form, the bidder certifies that it has read, understands, and will comply with these insurance requirements if it is selected as the City’s consultant. Failure to provide this insurance will render the bidder’s proposal “nonresponsive.”

_____ _____
Date Bidder

Contractor's Name

_____

List of Subcontractors and Off-Job Fabricators

Listing must comply with the provisions of Public Contract Code § 4104.

Name of Subcontractor or Off-Job Fabricator	**Contractor's License No. DIR Registration No.**	**Business Address Telephone No. Email address**	**Items of Work and Dollar Amount**

If more space is needed, attach additional sheets.

Public Contract Code § 4104 provides that bidders must list:

(a)(1) The name, the location of the place of business, and the California contractor license number of each subcontractor who will perform work or labor or render service to the prime contractor in or about the construction of the work or improvement, or a subcontractor licensed by the State of California who, under subcontract to the prime contractor, specially fabricates and installs a portion of the work or improvement according to detailed drawings contained in the plans and specifications, in an amount in excess of one-half of 1 percent of the prime contractor's total bid or, in the case of bids or offers for the construction of streets or highways, including bridges, in excess of one-half of 1 percent of the prime contractor's total bid or ten thousand dollars ($10,000), whichever is greater.

Per Public Contract Code §4104, Contractor's bidding on public projects are required to list above California contractor license numbers for all subcontractor's performing work in excess of one-half of one-percent of the contract's value.

UNIT PRICE BID SCHEDULE A
Schedule of Prices for the Construction of the:
MISCELLANEOUS CONCRETE IMPROVEMENTS
CITY PROJECT NO. 14/15-05
in Bellflower, California

Item No.	Description	Estimated Quantity	Unit Price	Total Amount
1.	Mobilization (Not to Exceed 5% of Bid)	1 LS		
2.	Traffic Control	1 LS		
3.	Clear, Grub, Seed, and Topper	1 LS		
4.	Remove Existing Curb	75 LF		
5.	Construct Retaining Curb	35 LF		
6.	Remove Sidewalk Complete	225 SF		
7.	Construct PCC Curb	70 LF		
8.	Construct 4" PCC Sidewalk	490 SF		
9.	R&R Curb and 2’ Gutter Including 3' A/C Slot Patch	960 LF		
10.	R&R Curb and 1’ Gutter Including 3’ A/C Slot Patch	55 LF		
11.	R&R 4" PCC Sidewalk	10,910 SF		
12.	R&R Drive Apron Including 3' A/C Slot Patch in Front of Apron	2,800 SF		
13.	R&R Pavers	1 LS		
14.	Grind 2" A/C	2,400 SF		
15.	Construct 2" A/C Overlay	35 TONS		
16.	Excavate (Unclassified) to Required Depth	50 CY		
17.	Construct 4" A/C	10 TONS		
18.	Construct 6" CMB	10 TONS		
19.	Install Truncated Domes Armorcast "Blue"	2 EA		

20.	Construct Curb Ramp Including Truncated Domes Armorcast "Blue"	2 EA		
21.	R&R Curb Ramp Including Truncated Domes Armorcast "Blue"	18 EA		
22.	Relocate Curb Drain Per Plan Including All Concrete, Grading, and Asphalt Work Associated with Relocation	2 EA		
23.	Remove A/C and PCC Curb and Gutter to Required Depth and Construct Bus Pads Per APWA Std Plan 131-2 Including 3' A/C Slot Patch	3 EA		
24.	Remove Existing Wall and Railing Complete and Finish Surface to Match Existing	14 LF		
25.	Construct Block Wall Per APWA Std 601-4 to Match Existing	10 LF		
26.	R&R Drive Apron Including 3' A/C Slot Patch on Front and Back of Apron Per Bellflower Standard Plan	400 SF		
27.	Remove Existing Tree Complete	1 EA		
28.	Replacement of Tree	650 IN		
29.	Striping	1 LS		
30.	Remove and Replace Slotted Cross Gutter	540 SF		

_____
Name of Bidder or Firm

TOTAL BID PRICE – FOR SCHEDULE A
For the lump sum of

$_____
(Price in figures)

_____
(Price in words)

_____

QUANTITIES OF WORK:

The quantities of work or material stated in the unit price items of the Bid Schedule are supplied only to give an indication of the general scope of the Work. The City of Bellflower does not expressly or by implication agree that the actual amounts of work or material will correspond therewith, and reserves the right after award to increase or decrease the quantity of any unit price bid item, by an amount up to 25 percent of increase or decrease, without a change in the unit prices, and may delete any bid item in its entirety, and receive full credit in the amount shown in the Bid Schedule for the deleted item of Work.

_____
Name of Bidder or Firm

MISCELLANEOUS CONCRETE IMPROVEMENTS
SPECIFICATIONS NO. 14/15-05

BID BOND

KNOW ALL MEN BY THESE PRESENTS: That we _____

_____, Principal,

and_____

_____, Surety, are held and firmly bound unto

THE CITY OF BELLFLOWER Obligee,

in the sum of Ten Percent of the total amount of the Bid for the payment of which we bind ourselves, our legal representatives, successors and assigns, jointly and severally, firmly by these presents.

Principal submitted or is about to submit a bid or proposal to Obligee on a contract for

xx

Should a contract be awarded to the principal and principal, within such time as specified, duly execute the contract in the prescribed form and deliver the same to obligee with all required bonds/performance securities, certificates of insurance and such other items as required in the bidding or contract documents then this obligation is null and void. Otherwise, it will remain in full force and effect, and if the contract is awarded to principal and principal fails, within the time specified, to duly execute the contract in the prescribed form and deliver the same to obligee with all said required items, then surety must pay obligee the full penalty sum of this bond.

Surety, for value received, hereby agrees that no extension of time, change, alteration, modification, or addition to the bidding or contract documents, or of the work required thereunder, releases or exonerates surety on this bond or in any way affect the obligation of this bond; and surety does hereby waive notice of same.

Signed, sealed and dated

_____
(Principal)

by_____(Seal)

_____
(Surety)

by_____
Attorney-in-Fact

INDICATE COMPLETE ADDRESS OF SURETY TO WHICH CORRESPONDENCE CONCERNING THIS BOND SHOULD BE DIRECTED.

Telephone No._____

NON COLLUSION DECLARATION TO BE EXECUTED BY BIDDER AND SUBMITTED WITH BID

The undersigned declares:

I am the _____ of _____, the party making the foregoing bid.

The bid is not made in the interest of, or on behalf of, any undisclosed person, partnership, company, association, organization, or corporation. The bid is genuine and not collusive or sham. The bidder has not directly or indirectly induced or solicited any other bidder to put in a false or sham bid. The bidder has not directly or indirectly colluded, conspired, connived, or agreed with any bidder or anyone else to put in a sham bid, or to refrain from bidding. The bidder has not in any manner, directly or indirectly, sought by agreement, communication, or conference with anyone to fix the bid price of the bidder or any other bidder, or to fix any overhead, profit, or cost element of the bid price, or of that of any other bidder. All statements contained in the bid are true. The bidder has not, directly or indirectly, submitted his or her bid price or any breakdown thereof, or the contents thereof, or divulged information or data relative thereto, to any corporation, partnership, company, association, organization, bid depository, or to any member or agent thereof, to effectuate a collusive or sham bid, and has not paid, and will not pay, any person or entity for such purpose.

Any person executing this declaration on behalf of a bidder that is a corporation, partnership, joint venture, limited liability company, limited liability partnership, or any other entity, hereby represents that he or she has full power to execute, and does execute, this declaration on behalf of the bidder.

I declare under penalty of perjury under the laws of the State of California that the foregoing is true and correct and that this declaration is executed on _____ [date], at _____ [city], _____ [state].

_____
Signature

PUBLIC WORKS CONTRACT
BETWEEN
THE CITY OF BELLFLOWER AND

This CONTRACT is entered into this day of , 20 , by and between the CITY OF BELLFLOWER, a general law city and municipal corporation ("the City") and ("the Contractor").

1. **WORK**.

   A. The Contractor will provide all work required by the Contract Documents (the "Work"). The Contractor agrees to do additional work arising from changes ordered by the City in accordance with the Contract Documents.

   B. The Contractor and the City agree to abide by the terms and conditions contained in the Contract Documents;

   C. The Contractor will furnish all of the labor; supplies and materials; equipment; printing; vehicles; transportation; office space and facilities; all tests, testing and analyses; and all matters whatsoever (except as otherwise expressly specified to be furnished by the City) needed to perform and complete the Work and provide the services required of the Contractor by the Contract Documents.

   D. "Contract Documents" means the Notice Inviting Bids; Instructions to Bidders; Supplementary Instructions to Bidders; Proposal; this Contract; Standard Specifications; Supplementary Conditions; Exhibits; Technical Specifications; List of Drawings; Drawings; Addenda; Notice to Proceed; Change Orders; Notice of Completion; and all other documents identified in the Contract Documents which together form the contract between the City and the Contractor for the Work. The Contract Documents constitute the complete agreement between the City and the Contractor and supersede any previous agreements or understandings.

2. **CONTRACT SUM.** The City agrees to pay the Contractor a sum not to exceed dollars ($) for the Work in the manner set forth in the Contract Documents. The City may adjust this amount as set forth in the Contract Documents.

3. **TIME FOR PERFORMANCE**.

   A. The Contractor will fully complete the Work within forty (40) working days (the "Contract Time.")

   B. The Contract Time will commence when the City issues a notice to proceed. The Contract Documents will supersede any conflicting provisions included on the notice to proceed issued pursuant to this Contract.

C. The Contractor may not perform any Work until:

i. The Contractor furnishes proof of insurance as required by the Contract Documents; and

ii. The City gives the Contractor a written, signed, and numbered purchase order and notice to proceed.

D. By signing this Contract, the Contractor represents to the City that the Contract Time is reasonable for completion of the Work and that the Contractor will complete the Work within the Contract Time.

E. Should the Contractor begin the Work before receiving written authorization to proceed, any such Work is at the Contractor's own cost and risk.

4. **DISPUTES**. Disputes arising from this contract will be determined in accordance with the Contract Documents and Public Contracts Code §§ 10240-10240.13.

5. **THIRD PARTY CLAIMS**. In accordance with Public Contracts Code § 9201, the City will promptly inform the Contractor regarding third-party claims against the Contractor, but in no event later than ten (10) business days after the City receives such claims. Such notification will be in writing and forwarded in accordance with the "Notice" section of the Contract Documents. As more specifically detailed in the Contract Documents, the Contractor agrees to indemnify and defend the City against any third-party claim.

6. **TAXPAYER IDENTIFICATION NUMBER**. The Contractor will provide the City with a Taxpayer Identification Number.

7. **PERMITS AND LICENSES**. Unless otherwise provided, the Contractor, at its sole expense, will obtain and maintain during the Contract Time, all necessary permits, licenses, and certificates that may be required in connection with the Work.

8. **OWNERSHIP OF DOCUMENTS.** All documents, data, studies, drawings, maps, models, photographs and reports prepared by the Contractor under the Contract Documents are the City's property. The Contractor may retain copies of said documents and materials as desired, but will deliver all original materials to the City upon the City's written notice.

9. **INDEMNIFICATION.** The Contractor agrees to indemnify, defend, and hold the City harmless as set forth in the Contract Documents. The requirements as to the types and limits of insurance coverage to be maintained by the Contractor as required by the Contract Documents, and any approval of such insurance by the City, are not intended to and will not in any manner limit or qualify the liabilities and obligations otherwise assumed by the Contractor pursuant to the Contract Documents, including, without limitation, to the provisions concerning indemnification.

10. **INDEPENDENT CONTRACTOR.** The City and the Contractor agree that the Contractor will act as an independent contractor and will have control of all work and

the manner in which is it performed. The Contractor will be free to contract for similar service to be performed for other employers while under contract with the City. The Contractor is not an agent or employee of the City and is not entitled to participate in any pension plan, insurance, bonus or similar benefits the City provides for its employees. Any provision in this Contract that may appear to give the City the right to direct the Contractor as to the details of doing the work or to exercise a measure of control over the work means that the Contractor will follow the direction of the City as to end results of the work only.

11. **AUDIT OF RECORDS.** The Contractor will maintain full and accurate records with respect to all services and matters covered under this Contract. The City will have free access at all reasonable times to such records, and the right to examine and audit the same and to make transcript therefrom, and to inspect all program data, documents, proceedings and activities. The Contractor will retain such financial and program service records for at least three (3) years after termination or final payment under the Contract Documents.

12. **NOTICES**. All communications to either party by the other party will be deemed made when received by such party at its respective name and address as follows:

The City	The Contractor
Len Gorecki, Director of Public Works 16600 Civic Center Drive Bellflower, CA lgorecki@bellflower.org	

Any such written communications by mail will be conclusively deemed to have been received by the addressee three (3) days after deposit thereof in the United States Mail, postage prepaid and properly addressed as noted above. In all other instances, notices will be deemed given at the time of actual delivery. Changes may be made in the names or addresses of persons to whom notices are to be given by giving notice in the manner prescribed in this paragraph.

13. **NO THIRD PARTY BENEFICIARY**. This Contract and every provision herein is for the exclusive benefit of the Contractor and the City and not for the benefit of any other party. There will be no incidental or other beneficiaries of any of the Contractor's or the City's obligations under this Contract.

14. **INTERPRETATION**. This Contract was drafted in, and will be construed in accordance with the laws of the State of California, and exclusive venue for any action involving this Contract will be in Los Angeles County.

15. **EFFECT OF CONFLICT**. In the event of any conflict, inconsistency, or incongruity between any provision of the Contract Documents, precedence will be as follows:

    A. This Contract;

    B. The Standard Specifications; and

C. Precedence of documents as determined in the Standard Specifications.

16. **SEVERABILITY.** If any portion of the Contract Documents are declared by a court of competent jurisdiction to be invalid or unenforceable, then such portion will be deemed modified to the extent necessary in the opinion of the court to render such portion enforceable and, as so modified, such portion and the balance of this Contract will continue in full force and effect.

17. **AUTHORITY/MODIFICATION.** The Parties represent and warrant that all necessary action has been taken by the Parties to authorize the undersigned to execute this Contract and to engage in the actions described herein. This Contract may be modified by written amendment. The City's city manager, or designee, may execute any such amendment on the City's behalf.

18. **ACCEPTANCE OF FACSIMILE SIGNATURES.** The Parties agree that this Contract, agreements ancillary to this Contract, and related documents to be entered into in connection with this Contract will be considered signed when the signature of a party is delivered by facsimile transmission. Such facsimile signature will be treated in all respects as having the same effect as an original signature.

19. **COVENANTS AND CONDITIONS.** The parties agree that all of the provisions hereof will be construed as both covenants and conditions, the same as if the words importing such covenants and conditions had been used in each separate paragraph.

20. **CAPTIONS.** The captions of the paragraphs of this Contract are for convenience of reference only and will not affect the interpretation of this Contract.

21. **TIME IS OF ESSENCE.** Time is of the essence for each and every provision of the Contract Documents.

IN WITNESS WHEREOF the parties hereto have executed this contract the day and year first hereinabove written.

CITY OF BELLFLOWER

_____
Jeffrey L. Stewart,
City Manager

_____

_____

_____

ATTEST:

_____
Mayra Ochiqui,
City Clerk

Taxpayer ID No. _____

APPROVED AS TO FORM:

_____
Karl H. Berger,
City Attorney

CITY OF BELLFLOWER

MISCELLANEOUS CONCRETE IMPROVEMENTS

SPECIFICATIONS NO. 14/15-05

FAITHFUL PERFORMANCE BOND

Bond No. _____
Bond Fee: _____

_____ ("PRINCIPAL") and , a corporation incorporated under the laws of the State of _____ and licensed by the State of California to execute bonds and undertakings as sole surety, as surety ("SURETY"), are held and firmly bound unto the CITY OF BELLFLOWER ("CITY") in the sum of **($_____)** dollars, lawful money of the United States, which may be increased or decreased by a rider hereto executed in the same manner as this bond, for the payment of which sum PRINCIPAL and SURETY bind themselves, their successors, and assigns, jointly and severally, by this instrument.

PRINCIPAL or SURETY will apply this bond for the faithful performance of any and all of the conditions and stipulations set forth in this bond, **SPECIFICATIONS NO. 14/15-05** , and the public works contract executed with such Specifications. In the case of any default in the performance of the conditions and stipulations of this undertaking, it is agreed that PRINCIPAL or SURETY will apply the bond or any portion thereof, to the satisfaction of any damages, reclamation, assessments, penalties, or deficiencies arising by reason of such default.

BOND CONDITIONS

1. PRINCIPAL will construct the public improvements identified in **SPECIFICATIONS NO. 14/15-05**, a copy of which is on file with CITY's Engineering Division ("Public Project"). Such performance will be in accordance with CITY's plans and profiles which are made a part of this bond when said plans and profiles are approved by the City Council and filed with CITY's Engineering Division. CITY has estimated the required amount of the bond as shown above.

2. PRINCIPAL's work on the Public Project will be done in accordance with CITY's plans and specifications and with any permit issued by CITY. Should PRINCIPAL fail to complete all required work within the time allowed, CITY may, at its sole discretion, cause all required work to be done and the parties executing the bond will be firmly bound for the payment of all necessary costs therefor.

3. PRINCIPAL will guarantee its work against any defective work, labor, or materials on the Public Project for a period of one (1) year following the Public Project's completion and acceptance by CITY.

4. This bond is conditioned upon and guarantees due compliance with all applicable law including, without limitation, the Bellflower Municipal Code ("BMC").

5. SURETY, for value received, agrees that no changes, extensions of time, alteration or modification of **SPECIFICATIONS NO. 14/15-05** or of the obligation to be performed will in any way affect its obligation on this bond, and it waives notice of any such

change, extension of time, alteration or modification of the contract documents or of the obligation to be performed.

6. This bond consists of this instrument; the plans and specifications identified above; and the following two (2) attached exhibits all of which are incorporated herein by reference:

A. A certified copy of the appointment, power of attorney, bylaws or other instrument entitling or authorizing the persons executing this bond to do so;

B. A certificate issued by the county clerk for the county in which SURETY's representative is located conforming with California Code of Civil Procedure § 995.640 and stating that SURETY's certificate of authority has not been surrendered, revoked, cancelled, annulled, or suspended, or in the event that it has, that renewed authority has been granted; and

7. Should PRINCIPAL perform its obligations within the time allowed, PRINCIPAL's obligation will be void upon the acceptance of the performance by CITY; otherwise this obligation will remain in full force and effect.

SIGNED AND SEALED this _____ day of _____, 20__.

_____	_____
PRINCIPAL's PRESIDENT	SURETY's PRESIDENT
_____	_____
PRINCIPAL's SECRETARY	SURETY's SECRETARY
PRINCIPAL's MAILING ADDRESS:	**SURETY's MAILING ADDRESS:**
_____	_____
_____	_____
_____	_____

NOTE: <u>ALL</u> signatures must be acknowledged by a notary public.

CITY OF BELLFLOWER

MISCELLANEOUS CONCRETE IMPROVEMENTS

SPECIFICATIONS NO. 14/15-05

LABOR AND MATERIALS BOND

Bond No. _____
Bond Fee: _____

_____, as principal ("PRINCIPAL") and , a corporation incorporated under the laws of the State of _____ and licensed by the State of California to execute bonds and undertakings as sole surety, as surety ("SURETY"), are held and firmly bound unto the CITY OF BELLFLOWER ("CITY") in the sum of **_____($_____)** dollars, lawful money of the United States, which may be increased or decreased by a rider hereto executed in the same manner as this bond, for the payment of which sum PRINCIPAL and SURETY bind themselves, their successors, and assigns, jointly and severally, by this instrument.

This bond is conditioned upon and guarantees payment by PRINCIPAL to contractors, subcontractors, and persons renting equipment; payment by PRINCIPAL and all PRINCIPAL'S subcontractors for all materials, provisions, provender, or other supplies, and equipment used in, upon, for or about the performance of the work contemplated in **, SPECIFICATIONS NO. 14/15-05** ("Public Project"), the public works contract executed for such Public Project, and for all work or labor of any kind performed for the Public Project. In the case of any default in the performance of the conditions and stipulations of this undertaking, it is agreed that PRINCIPAL or SURETY will apply the bond or any portion thereof, to the satisfaction of any damages, reclamation, assessments, penalties, or deficiencies arising by reason of such default.

BOND CONDITIONS

1. PRINCIPAL will construct the public improvements identified in **SPECIFICATIONS NO. 14/15-05**, and the public works contract executed for such Specifications, copies of which is on file with CITY's Engineering Division ("Public Project"). Such performance will be in accordance with CITY's plans and profiles which are made a part of this bond when said plans and profiles are approved by the City Council and filed with CITY's Engineering Division.

2. PRINCIPAL will pay all contractors, subcontractors, and persons renting equipment.

3. PRINCIPAL will pay for all materials and other supplies, for equipment used in, on, for or about the performance of the Public Project, and will pay for all work and labor thereon.

4. This bond is conditioned upon and guarantees due compliance with all applicable law including, without limitation, the Bellflower Municipal Code ("BMC").

5. SURETY, for value received, agrees that no changes, extensions of time, alteration or modification of **SPECIFICATIONS NO. 14/15-05,** or of the obligation to be performed will in any way affect its obligation on this bond, and it waives notice of any such change, extension of time, alteration or modification of the contract documents or of the obligation to be performed.

6. This bond consists of this instrument; the plans and specifications identified above; and the following TWO (2) attached exhibits all of which are incorporated herein by reference:

A. A certified copy of the appointment, power of attorney, bylaws or other instrument entitling or authorizing the persons executing this bond to do so; and

B. A certificate issued by the county clerk for the county in which SURETY's representative is located conforming with California Code of Civil Procedure § 995.640 and stating that SURETY's certificate of authority has not been surrendered, revoked, cancelled, annulled, or suspended, or in the event that it has, that renewed authority has been granted.

7. Should PRINCIPAL perform its obligations within the time allowed, PRINCIPAL's obligation will be void upon the acceptance of the performance by CITY; otherwise this obligation will remain in full force and effect.

SIGNED AND SEALED this _____ day of _____, 20__.

_____	_____
PRINCIPAL's PRESIDENT	SURETY's PRESIDENT
_____	_____
PRINCIPAL's SECRETARY	SURETY's SECRETARY
PRINCIPAL's MAILING ADDRESS:	**SURETY's MAILING ADDRESS:**
_____	_____
_____	_____
_____	_____

NOTE: ALL signatures must be acknowledged by a notary public.

WORKERS' COMPENSATION CERTIFICATE

(AS REQUIRED BY LABOR CODE § 1861)

I am aware of Labor Code § 3700 which requires every employer to be insured against liability for workers' compensation, or to undertake self-insurance in accordance with the provisions of said Code, and I will comply with such provisions before commencing the performance of the Work of this Contract.

Contractor _____

By _____

Title _____

DECLARATION OF SUFFICIENCY OF FUNDS
(California Labor Code Section 2810)

I, the undersigned, an authorized representative of _____ (insert name of Bidder) ("Bidder") with authority to make the statements contained in this Declaration on behalf of Bidder, hereby declare the following:

1. The Bidder's employer identification number for state tax purposes is _____ (insert identification number).

2. The Bidder's workers' compensation insurance policy number is _____ (insert policy number) and the name, address, and telephone number of the insurance carrier providing said insurance is: _____ (insert information requested).

3. The following information is provided concerning any and all vehicles that are owned by the Bidder and that will be used for transportation in connection with any service provided for the performance of the Work that is subject of the Bidder's Bid to the District (insert information requested. Attach addition sheets, if needed):

Vehicle	Vehicle ID No.	Vehicle Liability Insurance Policy No. (of Policy covering vehicle)	Name, Address and Telephone No. of Vehicle Liability Insurance Carrier (issuing Policy covering vehicle)

4. The following is the address of any real property that will be used to house workers in connection with the performance of the Work that is subject of the Bidder's Bid to the District (insert information requested. If no such housing will be provided, enter "none"). _____.

5. The actual or estimated number of workers that will be employed to perform the Work of the Project that is the subject of the Bidder's Bid, the total amount of wages to be paid to said workers, and the date on which said wages will be paid are as follows (attach additional sheets, if needed):

Total Number of Workers	Total Amount of Wages	Dates for Payment of Wages

6. Check only one of the following boxes, as applicable:

☐ The statement of number of workers declared in Paragraph 5, above, is a statement of the actual number of workers that will be employed; or

☐ The actual number of workers requested in Paragraph 5, above, is unknown and therefore the statement of number of workers declared therein is based on the Bidder's best estimate available at the time of Bid, rather than the actual number of workers that will be employed.

7. The actual or estimated total number of persons and entities who will be utilized as independent contractors to perform the Work of the Project that is the subject of the Bidder's Bid (together with their known, current local, state, and federal contractor license identification numbers that each is required to have under local, state or federal laws or regulations are as follows (attach additional sheets, if needed):

List of Independent Contractors	Current, Local, State and Federal Contractor License Identification Number

8. Check only one of the following boxes, as applicable:

☐ The statement of number of independent contractors declared in Paragraph 7, above, is a statement of the actual number of independent contractors that will be utilized; or,

☐ The actual number of independent contractors requested in Paragraph 7, above, is unknown and therefore the statement of number of independent contractors declared therein is based on the Bidder's best estimate available at the time of Bid, rather than the actual number of independent contractors that will be utilized.

I, the undersigned, declare under penalty of perjury that the foregoing statements are within my personal knowledge and are true and correct. Executed on this _____ day of _____, in the year 20___.

_____

_____
Print Name

CITY OF BELLFLOWER

MISCELLANEOUS CONCRETE IMPROVEMENTS

SPECIFICATIONS NO. 14/15-05

GUARANTY

In accordance with the terms of the contract for the _____ in the City of Bellflower (the "Contract") approved _____ between the City of Bellflower (the "Agency") and the undersigned (the "Contractor"), under which the Contractor shall complete work as described in the Contract Documents (as defined in the Contract), the following guarantee of said work is hereby made.

If any of the items installed pursuant to the Contract, prove defective or if the item, as a whole, proves defective, due to faulty workmanship, material furnished or methods of installation, or if the said item or any part thereof fails to operate properly, as planned, due to any of the above causes, all within one (1) year after date on which the work is accepted by the Agency, then the undersigned agrees the repairs shall be made and such materials as are necessary shall be furnished and installed within thirty (30) days after the receipt of demand from the Agency; provided, that if the Contract Documents require a longer guaranty period, then the longer period shall apply. In the event repairs are not made within thirty (30) days, the Agency shall have the unqualified option to make any needed repairs or replacements itself or by any other contractor. The Contractor agrees to reimburse the Agency, upon demand, of its expenses incurred in restoring said items to the condition contemplated in the Contract, including the cost of any equipment or materials replaced, or upon demand by the Agency, to replace any such equipment and repair said items completely without cost to the Agency so that they will operate successfully as originally contemplated.

Emergency repairs must necessarily be made by the Agency; therefore, when defective material or workmanship results in emergency repairs, the undersigned agrees to reimburse the Agency, upon demand, expenses incurred.

Each item will be deemed defective within the meaning of this guaranty in the event that item fails to operate as originally intended thereof and in accordance with the plans and specifications included in the Contract. The Faithful Performance Bond required for the Contract shall remain in full force and effect for the entire first year of the applicable guarantee period.

_____ _____
Date (Print Name of Contractor, Company or Corporation)

_____
Signature

CITY OF BELLFLOWER

MISCELLANEOUS CONCRETE IMPROVEMENTS

SPECIFICATIONS NO. 14/15-05

GENERAL PROVISIONS

0-0 STANDARD SPECIFICATIONS

0-1 GENERAL

Except as modified by these Special Provisions, the provisions of the latest edition of the "Standard Specifications for Public Works Construction" and its supplements prepared and promulgated by the Southern California Chapters of the American Public Works Association and the Associated General Contractors of America, constitute the Standard Specifications for this project.

0-2 NUMBERING OF SECTIONS

The numbering contained within the Special Provisions of the Contract Documents is intended to correspond with Green Book numbering.

0-3 MODIFICATIONS

To the extent that the provisions of the Contract Documents conflict with the Green Book, the Contract Documents take precedence.

1-2 DEFINITIONS

The following subsection is added to Subsection 1-2 of the Green Book.

1-2.1 ADDITIONAL DEFINITIONS

Acceptance – The date on which the City Council accepts the Work as complete.

Architect, Design Engineers, Soils Engineer, Structural Engineers - Advisors employed by the City.

Bidder - Any individual, firm, partnership, corporation, or combination thereof, submitting a proposal for the work contemplated, acting directly or through a duly authorized representative.

City Council - The body constituting the awarding authority of the City.

Compensable Delay -- a delay entitling the Contractor to an adjustment of the Contract Sum and an adjustment of the Contract Time in accordance with this Agreement.

Due Notice - A written notification, given in due time, of a proposed action where such notification is required by the contract to be given a specified interval of time (usually 48 hours or two working days) before the commencement of the contemplated action. Notification may be from Engineer to Contractor or from Contractor to Engineer.

Engineer - The City Engineer, or designee, as defined in the Green Book. Unless otherwise provided, all correspondence and decisions made relative to the contract will be by the City Engineer or his designated representative.

Green Book – The most recent edition of the Standard Specifications for Public Works Construction.

PCC – California Public Contract Code.

Prompt - The briefest interval of time required for a considered reply, including time required for approval of a governing body.

Public Works Director – The City's Public Works Director, or designee.

☐ (checked if applicable) State Standard Specifications - State of California Standard Specifications, dated July 1992, Business and Transportation Agency, Department of Transportation

Working Days - A working day is defined as any day, except Saturdays, Sundays, legal holidays and days when work is suspended by the Engineer, as provided in Subsection 6-3 and days determined to be non-working in accordance with Subsection 6-7, "Time of Completion."

1-3 <u>ABBREVIATIONS</u>

The following Subsection is added to Subsection 1-3 of the Green Book.

1-3.1 The following abbreviations are added to Subsection 1-3 of the Green Book:

AAN	American Association of Nurserymen
AGC	Associated General Contractors of America
AISC	American Institute of Steel Construction
APWA	American Public Works Association
ASME	American Society of Mechanical Engineers
IEEE	Institute of Electric and Electronic Engineers
NEC	National Electric Code
Green Book	The most current edition of the Standard Specification for

	Public Works Construction, and subsequent supplements prepared by Southern California Chapters of AGC and APWA
WATCH	Work Area Traffic Control Handbook
SPPWC	Standard Plans for Public Works Construction by the American Public Works Association 1997 edition and subsequent supplements
ASA	American Standard Association
CITY	City of Bellflower
SSP	State of California Standard Plans, current edition
SSS	State of California Standard Specifications, current edition

SECTION 2 – SCOPE AND CONTROL OF WORK

The following subsections 2-1.1 and 2-1.2 are added to the Green Book.

2-1.1 ACCESS TO PROJECT SITE

Not later than the date designated in the current Contract Schedule submitted by the Contractor, the City will provide access to the real property and facilities upon which the Work is to be performed, including access to real property and facilities designated in the Contract Documents for the Contractor's use.

2-1.2 OWNERSHIP AND USE OF CONTRACT DOCUMENTS.

The Contract Documents and all copies furnished to or provided by the Contractor are the City's property and may not be used on other work.

2-2.1 SCOPE OF WORK

The work to be done consists of furnishing all labor, materials, methods and processes, implements, tools and machinery which are necessary and required for the Miscellaneous Concrete Improvements Project as noted below:

The Contractor shall be responsible for furnishing, placing and maintaining barricades and lights as necessary to protect the public from danger due to the work being done. Contractor shall install a minimum of 4 temporary tab markers at all Stop Sign Intersections. City will repaint stop legends and stop bars.

Contractors will be allowed to close streets to through traffic for the removal and construction of cross gutters and alley return. Concrete shall have three day strength of 3,000 lbs. to allow street closure of not more than five days, from removals to opening Street for traffic. Notifications by contractor to Sheriff, Fire and property owners will be required.

1. In the event it is necessary to temporarily close any street to through traffic, the Contractor shall first obtain the approval of the Public Works Department including the submittal of a traffic control plan and then notify the Sheriff and Fire Departments and post the street per the approved traffic control plan.

2. The Contractor shall take all necessary precautions during all phases of the operation to safeguard persons and property from injury and/or damage with barricading in accordance with Section 7-10.3 of the Standard Specifications.

3. All plant structure (brush, grass, etc.,) and debris shall be removed from the vicinity, transported and disposed of away from the site at the Contractor's expense.

4. The street parkway, sidewalk and yard areas of all property shall be left free of all debris at the close of each day's operations (no exceptions).

5. Any work not completed by the Contractor relative to the public safety and welfare, may be done by City forces, and payment for such work shall be deducted from the final payment for work covered by this contract.

6. The Contractor shall notify the Public Works Department twenty-four (24) hours in advance of starting work on the contract.

7. After having officially started said contract, should Contractor discontinue work for any cause, he shall notify the Public Works Department of his intent to do so, and shall further notify the Public Works Department of the date of restarting operations.

8. Once any concrete is removed it shall be replaced within three (3) working days, and ready for use no less than 7 days following finished work.

9. Property owners shall be given seventy-two (72) hours written notice of any work being done that will obstruct the use of their driveway apron and forty-eight (48) hours written notice of any work adjacent to their property.

10. Alterations. By mutual consent in writing of the parties signatory of the contract, alterations or deviations, increases or decreases, additions or omissions in the specifications may be made and this same shall be in no way affect or make void the contract. The City of Bellflower reserves the right to increase or decrease the quantity of any item or portion of the work, or to omit portions of the work in accordance with the standard specifications, as may be deemed necessary or expedient by the Public Works Department.

11. Extra Work. New and unforeseen work will be classed as extra work when such work cannot be covered by any of the various items or combinations of items for which there is a bid price.

The Contractor shall not perform any extra work except upon written order from the Public Works Department. For such extra work, the Contractor shall receive payment previously agreed upon in writing.

12. Final Clean Up. Upon completion and before making applications for acceptance of the work, the Contractor shall clean the street or road, and all ground occupied by him connected with the work, of all rubbish, excess materials, temporary structures and equipment; and all parts of the work shall be left in a neat and presentable condition.

13. Public Utilities and Pipe Lines. In the prosecution of the work herein specified, the Contractor shall at all times afford the right to any owner of any public utilities or franchises, or other owners of pipe lines or conduits to enter upon the street for the purpose of making new installations, changes or repairs to said utilities or other property.

14. Standards. Copies of the Standard Specifications of the City of Bellflower are on file or available through the Public Works Department of the City of Bellflower.

15. Permits. No fee permit required.

16. Inspection. The Director of Public Works, or his/her authorized agent, shall at all times have access to work during construction and shall be furnished with every reasonable facility for ascertaining full knowledge respecting the progress, workmanship and character of materials used and employed in the work. The Contractor shall notify the Director of Public Works, or his/her authorized agent, forty-eight (48) hours in advance when he will require inspection for either material or work to be done.

The inspection of the work shall not relieve the Contractor of any of his obligations to fulfill the contract as prescribed. Defective work shall be made good, and unsuitable materials may be rejected, notwithstanding the fact that such defective work and unsuitable materials have been previously overlooked by the Director of Public Works or his/her authorized representative, and accepted or estimated for payment. The normal business hours for inspection are 7:00 a.m. to 4:00 p.m., Monday through Friday, excluding holidays. The City of Bellflower shall be reimbursed at the rate of $168.00 per hour for any inspection required other than the above mentioned hours.

17. When approved or directed by the Director of Public Works or his/her authorized representative, minor variations from the standard

details may be done when considered best in order to meet existing conditions subsequently developed and not apparent previously.

18. It shall be the responsibility of the Contractor to notify Underground Service Alert (U.S.A.) at least forty-eight (48) hours prior to the start of any excavation work, including stump grinding. It shall also be the Contractor's responsibility to remove the spray paint markings of the different utilities after the completion of the project.

2-3 SUBCONTRACTS

Subsection 2-3 Subcontractors of Green Book is deleted in its entirety and replaced with the following subsection.

2-3.1 GENERAL

Except as provided in PCC §§ 4100 et. seq., each bidder will file with its bid the name and location of the place of business of each subcontractor who will perform work or labor or render service to the prime contractor in or about the construction of the work or improvement, or a subcontractor licensed by the State of California who, under subcontract to the prime contractor, specifically fabricates and installs a portion of the work or improvement according to detailed drawings contained in the plans and specifications, in an amount in excess of one-half of one percent of the prime contractor's total bid. Only one subcontractor will be listed for each portion of the work, which portion will be defined in the bid. In each instance, the nature and extent of the work to be sublet will be described. The failure of the Contractor to specify a subcontractor, or the listing of more than one subcontractor for the same portion of the work, constitutes an agreement by the Contractor that it is fully qualified to perform that portion itself and that it will perform that portion itself.

The Contractor must have the City Council's written consent to substitute a subcontractor other than that designated in the original bid, to permit any subcontract to be assigned or transferred, or to allow a subcontract to be performed by other than the original subcontractor.

Subcontracting of work for which no subcontractor was designated in the original bid, and which is more than one-half of one percent of the work, will be allowed only in cases of public emergency or necessity, and then only after a finding reduced to writing as a public record of the City Council setting forth the facts constituting the emergency or necessity.

Violation of any of the above provisions will be considered a breach of the Contract, and the City may terminate the Contractor's control over the Work, cancel the contract, or assess the Contractor a penalty of not more than ten percent of the subcontract involved.

All persons engaged in the work, including subcontractors and their employees will be considered as employees of the Contractor. The

Contractor will be solely responsible for and have control over construction means, methods, techniques, sequences, procedures, and the coordination of all portions of the Work. The City will deal directly with, and make all payments to, the prime Contractor.

When subcontracted work is not being prosecuted in a satisfactory manner, the Contractor will be notified to take corrective action. The Engineer may report the facts to the City Council. If the City Council so orders, and on receipt by the Contractor of written instructions from the Engineer, the subcontractor will be removed immediately from the Work. That subcontractor will not again be employed on the Work.

If licensure or proper licensure is controverted, then proof of licensure pursuant to this section must be made by production of a verified certificate of licensure from the Contractors' State License Board which establishes that the individual or entity bringing the action was duly licensed in the proper classification of contractors at all times during the performance of any act or contract covered by the action. Nothing in this subdivision requires any person or entity controverting licensure or proper licensure to produce a verified certificate. When licensure or proper licensure is controverted, the burden of proof to establish licensure or proper licensure is on the licensee.

2-3.2 ADDITIONAL RESPONSIBILITY

Add the following to Subsection 2-3.2 Additional Responsibility:

The Contractor will submit experience statements for each subcontractor who will perform contract work that amounts to more than ten percent (10%) of the Work.

2-4 CONTRACT BONDS

The following paragraph is added to Subsection 2-4 of the Green Book.

The Faithful Performance Bond and the Labor and Materials Bond must be paid and in effect for one year after the acceptance of the job by the City in accordance with the guarantee required by Subsection 6-8.1.

2-5 PLANS AND SPECIFICATIONS

Subsection 2-5.1 of the Green Book is replaced by the following subsection.

2-5.1 GENERAL

The Contractor will maintain the following at the Work site:

1. One as-built copy of the Plans and Specifications, in good order

and marked to record current changes and selections made during construction.

2. The current accepted Contract Schedule.

3. Shop Drawings, Product Data, and Samples.

4. Approved permits from other agencies, including Cal-OSHA permits for trench shoring.

5. All other required submittals.

The Plans, Specifications, and other Contract Documents will govern the Work. The Contract Documents are intended to be complementary and cooperative and to describe and provide for a complete project. Anything in the Specifications and not on the Plans, or on the Plans and not in the Specifications, will be as though shown or mentioned in both.

Payment for any items on the plans for which there is no specific bid item will be included in the various items of work or in any item to which it is appurtenant.

If the Contractor performs any work which it knows or should know involves an error, inconsistency, or omission without notifying and obtaining written consent from the Engineer, the Contractor will be responsible for the resulting losses, including, without limitation, the costs of correcting defective work.

2-5.2 PRECEDENCE OF CONTRACT DOCUMENTS

The following paragraph is added to subsection 2-5.2 of the Green Book:

As the figured dimensions shown on the plans and in the specifications of the Contract may not in every case agree with scaled dimensions, the figured dimensions will be followed in preference to the scaled dimensions, and plans to a large scale will be followed in preference to the plans to a small scale. Should it appear that the work to be done, or any of the matters relative thereto, are not sufficiently detailed or explained in the Contract, the Contractor will apply to the Engineer for such further explanations as may be necessary, and will conform thereto as part of the Contract so far as may be consistent with the terms thereof. Any items shown on drawings and not mentioned in the specifications will be of like effect as if shown or mentioned in both.

2-5.5 ACCURACY OF PLANS AND SPECIFICATIONS

Although it is believed that much of the information pertaining to conditions and existing utilities that may affect the cost of the Work will be shown on the Plans or indicated in the Specifications, the City does not warrant the

completeness or accuracy of such information.

The Contractor will carefully study and compare each of the Contract Documents with the others and with information furnished by the City and will promptly report in writing to the Engineer any errors, inconsistencies, or omissions in the Contract Documents or inconsistencies with applicable law observed by the Contractor.

The Contractor will take field measurements, verify field conditions, perform soil investigations, and carefully compare with the Contract Documents such field measurements, conditions, and other information known to the Contractor before commencing the Work. Errors, inconsistencies, or omissions discovered at any time will be promptly reported in writing to the Engineer.

2-8 RIGHT-OF-WAY

The following subsection is added to Subsection 2-8 of the Green Book.

2-8.1 ADDITIONAL WORK AREAS AND FACILITIES

When the Contractor arranges for additional temporary work areas and facilities, the Contractor will provide the City with proof that the additional work areas or facilities have been left in a condition satisfactory to the owner(s) of said work areas or facilities before acceptance of the work.

2-9 SURVEYING

Subsection 2-9.3, Survey Service, is deleted in its entirety and replaced by the following subsection:

2-9.3 SURVEY SERVICE

2-9.3.1 CONSTRUCTION SURVEYING

The Contractor will provide for all construction surveying required to layout, monitor and complete the work. The surveying will be performed by a Land Surveyor or Civil Engineer authorized to practice land surveying by the State of California.

The Project Benchmark is shown on the plans. The Contractor will establish all necessary control lines based on the plans and record information on file with the County of Los Angeles Surveyor and the Engineer.

It is the responsibility of the Contractor to protect the survey control as shown on the plans. If the survey control is destroyed or disturbed during construction, the Contractor will provide for resetting them and file appropriate documents with the County of Los Angeles at the direction of

the Engineer.

Computations, survey notes, and other data used to accomplish the work will be neat, legible and accurate. Copies of all computations, survey notes, and other data (electronic format may be required) will be furnished to the Engineer before beginning work that requires their use.

2-9.3.2 MEASUREMENT AND PAYMENT

Construction Survey – Unless a separate bid item is provided, payment will be considered included in the other items of the bid and no additional payment will be made therefore.

3-3.2.2 BASIS FOR ESTABLISHING COSTS

Subsection 3-3.2.2 (c), Tool and Equipment Rental is modified where the second and third paragraphs are replaced with "Regardless of ownership, the rates to be used in determining the equipment usage costs will not exceed those listed for the same or similar equipment in the California State Department of Transportation publication of Labor Surcharge and Equipment Rates effective for the period of usage."

3-3.2.3 MARK UP

Subsection 3-3.2.3, Mark Up, is deleted in its entirety and replaced by the following subsection:

(a) Work by Contractor. The following percentages will be added to the Contractor's costs and will constitute the markup for all overhead and profits.

1) Labor.....20
2) Materials 15
3) Equipment Rental.....15
4) Other Items and Expenditures 15

To the sum of the costs and markups provided for in this subsection, 1 percent will be added as compensation for bonding. No other formula, e.g., the Eichleay or other method, may be used to calculate daily damages for office overhead, profit, or other purported loss.

(b) Work by Subcontractors. When all or any part of the extra work is performed by a Subcontractor, the markup established in 3-3.2.3(a) will be applied to the Subcontractor's actual cost of such work. A markup of 10 percent on the first $5,000 of the subcontracted portion of the extra work and a markup of 5 percent on work added in excess of $5,000 of the subcontracted portion of the extra work may be added by the Contractor.

(c) In the event that City becomes liable to Contractor for compensable delays, City agrees to pay Contractor the daily Contractor Delay Damages set forth in the Bid Form or Contractor's actual daily delay damages, whichever is less, for each day of Compensable Delay as provided for by these Contract Documents.

3-3.3 DAILY REPORTS BY CONTRACTOR

Add the following paragraph to subsection 3-3.3, Daily Reports by Contractor:

If disagreement continues regarding extra work, the Contractor may seek compensation in accordance with the Claims procedure. Daily Reports required by this subsection must be made part of the Claim as supporting data for the Claim.

3-4 CHANGED CONDITIONS

Subsection 3-4, Changed Conditions, is deleted in its entirety and replaced with the following subsection:

If the Contractor encounters concealed or unknown conditions that differ materially from those anticipated or expected ("changed conditions"), the Contractor will immediately notify the Engineer in writing of such changed conditions (upon discovery and before disturbing such changed conditions), as provided in Subsection 6-11, so that the Engineer can determine if such conditions require design details that differ from those design details shown in the Contract Documents. Notwithstanding the thirty (30) day time period set forth in Subsection 6-11.3, the Contractor is liable to the City for any extra costs incurred as a result of the Contractor's failure to promptly give such notice.

Changed conditions include, without limitation, the following:

1. Subsurface or latent physical conditions differing materially from those represented in the Contract Documents;

2. Unknown physical conditions of an unusual nature differing materially from those ordinarily encountered and generally recognized as inherent in work of the character being performed; and

3. Material differing from what is represented in the Contract which the Contractor believes may be hazardous waste as defined in California Health & Safety Code § 25117 that is required to be removed to a Class I, II, or III disposal site in accordance with applicable law.

The Engineer will promptly investigate conditions that appear to be changed conditions. The Engineer's decision, and any dispute regarding that decision, will be made in accordance with Section 6-11 except that the Engineer will render a decision promptly.

Any information provided pursuant to INFORMATION AVAILABLE TO BIDDERS is subject to the following provisions:

1. The information is made available for the Bidders' convenience and is not a part of the Contract.

2. The City has not determined the accuracy or completeness of such information and all such information is made available to Bidders without any representation or warranty by the City whatsoever as to its accuracy, completeness, or relevancy.

3. Bidders will independently evaluate such information for their use and will be solely responsible for use or interpretation of such information. Any such use or interpretation will not be the basis of any claim against the City.

3-5 DISPUTED WORK

Subsection 3-5 is deleted in its entirety and replaced by the following subsection.

If the Contractor and the City do not reach agreement on disputed work, the City may direct the Contractor to proceed with the work. Any payment for the disputed work will be determined pursuant to the claims procedures in these Special Provisions. Although not to be construed as proceeding under extra work provisions, the Contractor will keep and furnish records of disputed work as required by the Contract Documents.

4-1.3 INSPECTION REQUIREMENTS

Subsection 4-1.3, Inspection Requirements, is deleted in its entirety and replaced by the following subsections.

4-1.3.1 GENERAL

Unless otherwise specified, inspection at the source of production for such materials and fabricated items as bituminous paving mixtures, structural concrete, fabricated metal products, cast metal products, welding, reinforced and unreinforced concrete pipe, application of protective coatings, and similar shop and plant operations is not required. A certificate of compliance, signed by an authorized officer of the producer, certifying compliance with the contract documents will be submitted for all of the following materials: steel pipe, sizes less than 18 inches; vitrified

clay pipe; asbestos cement pipe; cast iron pipe; reinforced concrete pipe; non-reinforced concrete pipe; and PVC sewer and water pipe; subject to sampling and testing by City.

Standard items of equipment, such as electric motors, conveyors, plumbing fittings and fixtures, lumber, plywood, and so on, are subject to inspection at the job site.

All other equipment items will be inspected and tested in accordance with the contract documents.

The City does not provide full time inspection. The Contractor will provide 24-hour minimum notice for each inspection required by the work unless other arrangements have been agreed upon, in writing, with the City Engineer. Any inspection required outside of normal working hours and days, including holidays, will be at the Contractor's cost at rates established by the City.

4-1.3.2 INSPECTION OF MATERIALS NOT PRODUCED LOCALLY

Contractor purchased materials, fabricated items, and equipment, produced at sources located more than 50 miles outside the corporate limits of the City, and which are specified to be inspected in the Contract Documents, will be inspected by inspectors or testing laboratories arranged for and paid for by City. Report of such inspection must be submitted to the City. If any item inspected fails to meet the specified criteria, the Contractor will pay all costs for reinspection, and such costs may be deducted from payments due to the Contractor.

4-1.6 TRADE NAMES OR EQUALS

Whenever any material, product, equipment, or service is specified by brand, trade, or proprietary name, the item so specified will be deemed to be followed by the words “or equal”.

For the City's consideration of a proposed "equal" item, the Bidder must submit, a minimum of ten (10) calendar days before the date of the bid opening, documentation of the particulars of the proposed "equal item." At a minimum, the submitted documentation will include:

- Written request with explanation of why the product should be considered as an equal product.
- Material specifications.
- Technical specifications.
- Test data.

- Samples.
- Comparison chart of key specifications of the "equal" item against similar specifications of the specified item.
- Work locations and reference telephone numbers of at least three (3) locations where the proposed "equal" item has been recently installed under similar conditions.
- Warranty data.

The Bidder will be notified by the Engineer whether or not the proposed "equal" product is acceptable to the City five (5) calendar days before the date of the bid opening. Failure to submit all required documentation and/or submittal of incomplete documents may result in the City's rejection of the proposed "equal" product without further consideration.

5-2 PROTECTION

The following subsection is added to Subsection 5-2 of the Green Book.

5-2.1 INCORRECT LOCATION OF UTILITIES

If the Contractor, while performing the Work, discovers utility facilities not identified correctly or not shown in the contract plans or specifications by the City, the Contractor will immediately notify the City and utility owner in writing.

5-4 RELOCATION

The following subsection is added to Subsection 5-4 of the Green Book.

5-4.1 RESPONSIBILITY OF UTILITY REMOVAL OR RELOCATION

The City will be responsible to arrange for the removal, repair, or relocation of existing utilities located within the project limits if such utilities are not correctly identified in the contract plans or specifications by the City. The City will have the sole discretion to perform repairs or relocation work or permit the Contractor to do such repairs or relocation.

5-5 DELAYS

The following paragraphs are added to Subsection 5-5 of the Green Book.

Actual loss, as used in this Subsection, will be understood to include no items of expense other than idle time of equipment and necessary payments for idle time of workers, cost of extra moving of equipment, and

cost of longer hauls. Compensation for idle time of equipment and idle time of workers will be determined by Subsection 5-5.1 and no markup will be added in either case for overhead and profit. The cost of extra moving of equipment and the cost of longer hauls will be paid for as extra work.

The following subsection is added to Subsection 5-5 of the Green Book.

5-5.1 CALCULATING IDLE TIME

Equipment idle time will calculated in accordance with Subsection 3-3.2.2(c) and based upon the actual normal working time during which the delay condition exists, but in no case will exceed 8 hours in any one day. The days for which compensation will be paid will be the calendar days, excluding Saturdays, Sundays and legal holidays, during the existence of the delay.

Worker idle time will be calculated in accordance with Subsection 3-3.2.2(a).

6-1 CONSTRUCTION SCHEDULE AND COMMENCEMENT OF WORK

Section 6-1, Construction Schedule and Commencement of Work, is deleted in its entirety and replaced by the following subsections.

Pre-Construction Meeting:

After contract award, the City will arrange for a pre-construction meeting to discuss the construction of the project. City will invite utility agencies and the contractor will arrange for all of its sub-contractors to attend the meeting.

6-1.1 CONTRACT SCHEDULE

After notification of award and before starting any work, the Contractor will submit a Contract Schedule to the Engineer for review, as required by these Specifications within fifteen (15) days of award.

6-1.2 CONTENT OF CONTRACT SCHEDULE

The Contract Schedule, and any updated Contract Schedule, will meet the following requirements:

1. Schedules must be suitable for monitoring progress of the Work.

2. Schedules must provide necessary data about the time for the Engineer's decisions.

3. Schedules must be sufficiently detailed to demonstrate adequate planning for the Work.

4. Schedules must represent a practical plan to complete the Work within the Contract Time.

5. Schedules must show the critical path method for completing the Work.

The Engineer's review of the form and general content of the Contract Schedule and any updated Contract Schedules is only for the purpose of determining if the listed requirements are satisfied, nothing more.

6-1.3 EFFECT OF CONTRACT SCHEDULE

The Contract Schedule, and any updated Contract Schedules, will represent a practical plan to complete the Work within the Contract Time. Extension of any schedule beyond the Contract Time will not be acceptable. Schedules showing the Work completed in less than the Contract may be acceptable if judged by the Engineer to be practical. Acceptance of such a schedule by the Engineer will not change the Contract Time. The Contract Time, not the Contract Schedule, will control in determining liquidated damages payable by the Contractor and in determining any delay.

If a schedule showing the Work completed in less than the Contract Time is accepted, the Contractor will not be entitled to extensions of the Contract Time for Excusable Delays or Compensable Delays or to adjustments of the Contract Sum for Compensable Delays until such delays extend the completion of the Work beyond the expiration of the Contract Time.

The Contractor will plan, develop, supervise, control, and coordinate the performance of the Work so that its progress and the sequence and timing of Work activities conform to the current accepted Contract Schedule. The Contractor will continuously obtain from Subcontractors information and data about the planning for and progress of the Work and the delivery of equipment, will coordinate and integrate such information and data into updated Contract Schedules, and will monitor the progress of the Work and the delivery of equipment. The Contractor will act as the expeditor of potential and actual delays, interruptions, hindrances, or disruptions for its own forces and those forces of Subcontractors. The Contractor will cooperate with the Engineer in developing the Contract Schedule and updated Contract Schedules.

The Engineer's review and comments about any schedule or scheduling data will not relieve the Contractor from its sole responsibility to plan for, perform, and complete the Work within the Contract Time. Review and comments about any schedule will not transfer responsibility for any schedule to the Engineer or the City nor imply their agreement with (1) any assumption upon which such schedule is based or (2) any matter

underlying or contained in such schedule.

The Engineer's failure to discover errors or omissions in schedules that have been reviewed, or to inform the Contractor that the Contractor, Subcontractors, or others are behind schedule, or to direct or enforce procedures for complying with the Contract Schedule will not relieve the Contractor from its sole responsibility to perform and complete the Work within the Contract Time and will not be a cause for an adjustment of the Contract Time or the Contract Sum.

The Contractor will perform the Work in accordance with the currently accepted Contract Schedule.

6-1.4 COMMENCEMENT OF CONTRACT TIME

The Contract Time will commence when the City issues a Notice to Proceed. The Work will start on the date specified in the Notice to Proceed and within a maximum of fifteen (15) days after the date of the Notice to Proceed, and be diligently prosecuted to completion with the time provided in the Specifications.

6-4 DEFAULT BY CONTRACTOR

The language in subsection 6-4 is deleted in its entirety and replaced with the following subsections.

6-4.1 GENERAL

Should the Contractor fail to begin delivery of material and equipment, to commence the Work within the time specified, to maintain the rate of delivery of material, to execute the Work in the manner and at such locations as specified, or fail to maintain the Work schedule (as determined by the current accepted Contract Schedule) which will ensure the City's interest, or if the Contractor is not carrying out the intent of the Contract, the City may serve written notice upon the Contractor and the Surety on its Faithful Performance Bond demanding satisfactory compliance with the Contract.

6-4.2 TERMINATION OF CONTRACTOR'S CONTROL OVER THE WORK

The City may terminate the Contractor's control over the Work without liability for damages when, in the City's opinion, the Contractor is not complying in good faith, has become insolvent, or has assigned or subcontracted any part of the Work without the City's consent. Should such termination occur, the Contractor will be paid the actual amount due based on Contract Unit Prices or lump sums bid and the quantity and quality of the work completed and in place at the time of termination, less damages caused to the City by the Contractor's action or inaction.

In the event of such termination of control, the City may do any one, or combination of, the following:

1. Serve written notice upon the Surety on its Faithful Performance Bond demanding satisfactory compliance with the Contract. In such event the Surety will, within 5 days, assume control and perform the Work as successor to the Contractor;

2. The City may perform the Work itself and deduct the cost thereof from any payment due to the Contractor;

3. The City may replace the Contractor with a different contractor to complete the work and deduct the cost thereof from any payment due to the Contractor.

Nothing herein will waive, or serve as a limitation upon, any additional remedy the City may have under these Contract Documents or applicable law.

6-4.3 SURETY'S ASSUMPTION OF CONTROL

Should the Surety assume any part of the Work, it will take the Contractor's place in all respects for that part, and will be paid by the City for all work performed by it in accordance with the Contract. If the Surety assumes the entire Contract, all money due the Contractor at the time of its default will be payable to the Surety as the Work progresses, subject to the terms of the Contract.

If the Surety does not assume control and perform the Work within 5 days after receiving notice of cancellation, or fails to continue to comply, the City may exclude the Surety from the premises. The City may then take possession of all material and equipment and complete the Work by City's forces, by letting the unfinished work to another contractor, or by a combination of such methods. In any event, the cost of completing the Work will be charged against the Contractor and its Surety and may be deducted from any money due or becoming due from the City. If the sums due under the Contract are insufficient for completion, the Contractor or Surety will pay to the City within 5 days of completion, all costs in excess of the sums due.

The provisions of this subsection will be in addition to all other rights and remedies available to the City under applicable law.

6-6 DELAYS AND EXTENSIONS OF TIME

Subsections 6-6.1 to 6-6.4 are deleted and replaced with the following subsections.

6-6.1 GENERAL

If delays are caused by unforeseen events beyond the control of the Contractor, such delays will entitle the Contractor to an extension of time as provided herein, but the Contractor will not be entitled to damages or additional payment due to such delays except as otherwise provided herein. Excusable delay may include: war, earthquakes exceeding 3.5 on the Richter Scale, government regulation, labor disputes outside the contemplation of the parties, strikes outside the contemplation of the parties, fires, floods, changes to the Work as identified herein, or other specific events that may be further described in the Specifications.

Delays to the project caused by labor disputes or strikes involving trades not directly related to the project, or involving trades not affecting the project as a whole will not warrant an extension of time.

The City will not grant an extension of time for a delay by the Contractor's inability to obtain materials unless the Contractor furnishes to the Engineer documentary proof. The proof must be provided in a timely manner in accordance with the sequence of the Contractor's operations and accepted construction schedule.

Should delays be caused by events other than those included herein, the Engineer may, but is not required to, deem an extension of time to be in the City's best interests.

6-6.2 EXTENSIONS OF TIME

If granted, extensions of time will be based upon the effect of delays to the critical path of the Work as determined by the current accepted Contract Schedule. Delays to minor portions of the Work that do not affect the critical path will not be eligible for extensions of time.

6-6.3 PAYMENT FOR DELAYS TO CONTRACTOR

Any payment for compensable delay will be based upon actual costs as set forth in Subsection 5-5 excluding, without limitation, what damages, if any, the Contractor may have reasonably avoided. The Contractor understands that this is the sole basis for recovering delay damages and explicitly waives any right to calculate daily damages for office overhead, profit, or other purported loss, using different formulas including, without limitation, the Eichleay Formula.

6-6.4 WRITTEN NOTICE AND REPORT

If the Contractor desires payment for a delay or an extension of time, it will give the Engineer written notice of such request not later than the time limit set forth in the Proposal for submitting a claim after the event or occurrence giving rise to a delay claim. Failure to submit a written request within such amount of time will result in the Contractor waiving its delay

claim.

Any claim for payment or an extension of time must be in the form required by the "Claims" sections of these Specifications.

In no event will the City grant the Contractor an extension of time if the delay is within the Contract Time as identified by the Contract Documents.

6.72 WORKING HOURS

The Contractor's activities shall be confined to the hours of 7:30 a.m. to 4:00 p.m., Monday through Friday, excluding City holidays. Deviation from these hours will not be permitted without the prior consent of the Engineer, except in emergencies involving immediate hazard to persons or property. Traffic may only be restricted between the hours of 9:00 am and 3:30 pm and subject to the review of the City Manager. One lane of traffic in each direction shall be maintained at all times on major and secondary streets.

6-7.4 NIGHT WORK

The following paragraph is added to Section 6-7 of the Green Book:

The City will not permit Work between the hours of 4 p.m. and 7:30 a.m. of the following day unless specifically provided for in the bid documents or unless the Contractor receives prior written approval.

6.7.5 WEEKEND AND HOLIDAY WORK

The Engineer may, but is not required to, allow the Contractor to work on Saturdays, Sundays and City Holidays.

6-8 COMPLETION AND ACCEPTANCE

Subsection 6-8 is deleted in its entirety and replaced by the following subsection:

6-8 COMPLETION AND ACCEPTANCE

The Work will be inspected by the Engineer for acceptance upon the Engineer receiving the Contractor's written assertion that the Work is complete.

If, in the Engineer's judgment, the Work is complete and is ready for acceptance, the Engineer will accept the Work on behalf of the City in the manner prescribed by the City. The Engineer will recommend approval of the Notice of Completion to the City Council. This will be the date when the Contractor is relieved from responsibility to protect the Work.

All work will be guaranteed by the Contractor against defective

workmanship and materials furnished by the Contractor for a period of 1 year from the date the Work was completed. The Contractor will replace or repair any such defective work in a manner satisfactory to the Engineer, after notice to do so from the Engineer, and within the time specified in the notice. If the Contractor fails to make such replacement or repairs within the time specified in the notice, the City may perform this work and the Contractor's sureties will be liable for the cost thereof.

6-8.1 GENERAL GUARANTY

The Contractor will remedy any defects in the work and pay for any damage to other work resulting therefrom, which will appear within a period of one year from the date of final acceptance of the work unless a longer period is specified. The owner will give notice of observed defects with reasonable promptness.

6-9 LIQUIDATED DAMAGES

Subsection 6-9, Liquidated Damages, of the Green Book is deleted in its entirety and replaced by the following subsections.

6-9.1 FAILURE TO COMPLETE WORK ON TIME

If all the work called for under the contract is not completed before or upon the expiration of the Contract Time, the City will sustain damage. Since it is and will be impracticable to determine the actual damage which the City will sustain in the event of and by reason of such delay, it is therefore agreed that the Contractor will pay to the City the sum specified in the Proposal for each and every calendar day beyond the time prescribed to complete the work not as a penalty, but as a predetermined liquidated damage. The Contractor agrees to pay such liquidated damages as are herein provided, and in case the same are not paid, agrees that the City may deduct the amount thereof from any money due or that may become due to the Contractor under the contract.

Unless otherwise specified, liquidated damages will be $1,000 per calendar day.

6-11 DISPUTES AND CLAIMS; PROCEDURE

6-11.1 GENERAL

Consistent with PCC § 10240.6, "Claim" means a written demand or assertion by the Contractor that seeks an adjustment or interpretation of the terms of the Contract Documents, payment of money, extension of time, or other relief with respect to the Contract Documents, including a determination of disputes or matters in question between the City and the Contractor arising out of or related to the Contract Documents or the performance of the Work, and claims alleging an unforeseen condition or

an act, error, or omission by the City, the Engineer, their agents or employees. "Claim" does not mean, and the Claims procedures herein do not apply, to the following:

1. Claims respecting penalties for forfeitures prescribed by statute or regulations, which a government agency is specifically authorized to administer, settle, or determine.

2. Claims respecting personal injury, death, reimbursement, or other compensation arising out of or resulting from liability for personal injury or death.

3. Claims respecting a latent defect, breach of warranty, or guarantee to repair.

4. Claims respecting stop notices.

If a Claim is subject to the Change Order procedures, the Claim arises upon the issuance of a written final decision denying in whole or in part the Contractor's Change Order Request. If a Claim is not subject to the Change Order Procedures, the Claim arises when the Contractor discovers, or reasonably should discover, the condition or event giving rise to the Claim.

6-11.2 FORM

A Claim must include the following:

1. A statement that it is a Claim and a request for a decision.

2. A detailed description of the act, error, omission, unforeseen condition, event or other condition giving rise to the Claim.

3. If the Claim is subject to the Change Order procedures, a statement demonstrating that a Change Order Request was timely submitted and denied.

4. A detailed justification for any remedy or relief sought by the Claim, including to the extent applicable, the following:

   a) If the Claim involves extra work, a detailed cost breakdown claimed. The breakdown must be provided even if the costs claimed have not been incurred when the Claim is submitted.

   b) To the extent costs have been incurred when the Claim is submitted, the Claim must include actual cost records (including, without limitation, payroll records, material and rental invoices) demonstrating that costs claimed have

actually been incurred.

c) To the extent costs have not yet been incurred at the time the Claim is submitted, actual cost records must be submitted on a current basis not less than once a week during any periods costs are incurred. A cost record will be considered current if submitted within 7 days of the date the cost reflected in the record is incurred. At the Engineer's request, claimed extra costs may be subject to further verification procedures (such as having an inspector verify the performance of alleged extra work on a daily basis).

5. If the Claim involves an error or omission in the Contract Documents:

a) An affirmative representation that the error or omission was not discovered before submitting a bid for the Contract; and

b) A detailed statement demonstrating that the error or omission reasonably should not have been discovered by the Contractor, its Subcontractors and suppliers, before submitting a bid for the Contract.

6. If the Claim involves an extension of the Contract Time, written documentation demonstrating the Contractor's entitlement to a time extension.

7. If the Claim involves an adjustment of the Contract Sum for delay, written documentation demonstrating the Contractor's entitlement to such an adjustment.

8. A personal certification from the Contractor that reads as follows:

"I, _____, BEING THE _____ (MUST BE AN OFFICER) OF _____ (CONTRACTOR NAME), DECLARE UNDER PENALTY OF PERJURY UNDER CALIFORNIA LAW, AND DO PERSONALLY CERTIFY AND ATTEST THAT I HAVE THOROUGHLY REVIEWED THE ATTACHED CLAIM FOR ADDITIONAL COMPENSATION OR EXTENSION OF TIME, AND KNOW ITS CONTENTS, AND SAID CLAIM IS MADE IN GOOD FAITH; THE SUPPORTING DATA IS TRUTHFUL AND ACCURATE; THAT THE AMOUNT REQUESTED ACCURATELY REFLECTS THE CONTRACT ADJUSTMENT FOR WHICH THE CONTRACTOR BELIEVES CITY IS LIABLE; AND, FURTHER, THAT I AM FAMILIAR WITH CALIFORNIA PENAL CODE § 72 AND CALIFORNIA GOVERNMENT CODE § 12650, ET SEQ., PERTAINING TO FALSE CLAIMS, AND FURTHER KNOW AND UNDERSTAND THAT SUBMITTING OR CERTIFYING A FALSE CLAIM MAY

LEAD TO FINES, IMPRISONMENT, AND OTHER SEVERE LEGAL CONSEQUENCES."

6-11.3 CLAIMS SUBMITTED TO ENGINEER

Within 30 days after the circumstances giving rise to a Claim occur, the Contractor will submit its Claim to the Engineer for a decision. Regardless of any Claim submittal, or any dispute regarding a Claim, unless otherwise directed by the Engineer, the Contractor will not cause any delay, cessation, or termination of the Work, but will diligently proceed with the performing the Work in accordance with the Contract Documents. Except as otherwise provided, the City will continue to make payments in accordance with the Contract Documents.

6-11.4 CLAIM IS PREREQUISITE TO OTHER REMEDY

The Contractor certifies that it is familiar with PCC § 10240.2 and understands and agrees that submitting a Claim in accordance with these Specifications is an express condition precedent to the Contractor's right to otherwise pursue a claim whether through alternative dispute resolution or by litigation. Should the Contractor fail to submit a claim in accordance with these Specifications, including the time limits set forth herein, it will waive any right to a remedy, whether in law or equity, it might otherwise have pursuant to the Contract Documents or applicable law.

6-11.5 DECISION ON CLAIMS

The Engineer will promptly review Claims submitted by the Contractor in accordance with these Specifications. Should the Engineer require additional supporting evidence to evaluate the claim, the Engineer will request such additional information in writing. Any such requested data will be furnished not later than 10 days after the Contractor receives the Engineer's request.

The Engineer will render a decision not later than 60 days after either receiving the Claim or the deadline for furnishing additional supporting data, whichever is later. If the Engineer fails to render a decision within the time period established herein, then the Claim will be deemed denied. The Engineer's decision will be final and binding unless appealed in accordance with these Specifications.

The Engineer's decision on a Claim will include a statement substantially as follows:

"This is a decision pursuant to the General Specifications of your contract. If you are dissatisfied with the decision, and have complied with the procedural requirements for asserting claims, you may have the right to alternative dispute resolution or litigation. Should you fail to take appropriate action within 30 days of the date of this decision, the decision

will become final and binding and not subject to further appeal."

6-11.6 APPEAL OF ENGINEER'S DECISION

Should the Contractor dispute the Engineer's decision, then the Contractor must appeal that decision to the City's Public Works Director within 30 days of receiving the Engineer's decision.

The Public Works Director will address disputes or claims within 30 calendar days after receiving such request and all necessary supporting data. The Public Works Director's decision on the dispute or claim will be the City's final decision.

If the Contractor disputes the Public Works Director's decision, then the Contractor must demand alternative dispute resolution in accordance with this Section and the PCC within 30 days of the City's final decision.

6-11.7 MEDIATION

If the City and the Contractor agree, disputes between the parties may be submitted to non-binding mediation. If the parties cannot agree to an alternative form of mediation, then mediation will be administered by the American Arbitration Association ("AAA") under its Construction Industry Mediation Rules, unless the use of such rules are waived by mutual stipulation of both parties.

The parties may, but are not required to be, represented by counsel in mediation.

The requirement for mediation will not alter or modify the time limitations otherwise provided for claims and no conduct or settlement negotiation during mediation will be considered a waiver of the City's right to assert that claim procedures were not followed.

6-11.8 ARBITRATION

If the City and Contractor do not agree to mediation, then a disputes will be submitted to neutral non-binding (except as provided herein) arbitration. Arbitration will be conducted in accordance with PCC § 10240.3. Any decision rendered by an arbitrator will be consistent with PCC § 10240.8.

The exclusive venue for any arbitration will be in Los Angeles County.

The expenses and fees of the arbitrators and the administrative fees, if any, will be divided among the parties equally. Each party will pay its own counsel fees, witness fees, and other expenses incurred for its own benefit.

6-11.9 WHEN ARBITRATION DECISION BECOMES BINDING

The decision rendered by the arbitrator will become binding upon the parties unless appealed to the Los Angeles County Superior Court pursuant to PCC § 10240.12 within 30 days of the decision. If subsequent litigation results in an award to the party appealing the arbitration that is less than or equal to that of the arbitration decision, or if the litigation results in a decision in favor of the nonappealing party, then the party appealing the arbitration will pay the nonappealing party's attorney's fees and court costs.

6-11.10 APPEAL TO SUPERIOR COURT; WAIVER OF JURY TRIAL

Should a party timely object to the arbitration decision, it may file a petition with the Los Angeles County Superior Court in accordance with California Code of Civil Procedure ("CCP") §§ 1285, et seq. Notwithstanding the limitations set forth in CCP § 1286.2, the court may vacate, correct, or adjust an arbitration award, and enter judgment in accordance with CCP § 1287.4, for any legal or equitable basis including, without limitation, error of law. The court will apply the substantial evidence standard of review when considering the appeal of an objecting party.

BY EXECUTING THESE CONTRACT DOCUMENTS, THE CONTRACTOR AGREES TO HAVE DISPUTES OR CONTROVERSY CONCERNING THE CONSTRUCTION, INTERPRETATION, PERFORMANCE, OR BREACH OF THESE CONTRACT DOCUMENTS, INCLUDING CLAIMS FOR BREACH OF CONTRACT OR ISSUES OF BAD FAITH DECIDED IN ACCORDANCE WITH THIS SECTION 6-11. BOTH THE CITY AND THE CONTRACTOR WAIVE THEIR RIGHT TO A JURY TRIAL FOR THESE DISPUTES OR ISSUES.

7-2 LABOR

The following subsections are added to Subsection 7-2 of the Green Book.

7-2.3 PREVAILING WAGES

The Contractor will post at appropriate conspicuous points at the site of the project a schedule showing determinations of the Director of Industrial Relations of the prevailing rate of per diem wages. It will be the Contractor's responsibility to obtain copies of the prevailing rate of per diem wages. One source that may be used is the California Department of Industrial Relations website which is currently located at www.dir.ca.gov, or by calling the Prevailing Wage Unit at (415) 703-4774.

Attention is directed to Labor Code §§ 1777.5, 1777.6 and 3098 concerning the employment of apprentices by the Contractor or any subcontractor.

Labor Code § 1777.5 requires the Contractor or subcontractor employing tradesmen in any apprenticeship occupation to apply to the joint apprenticeship committee nearest the site of the public works project and which administers the apprenticeship program in that trade for a certificate of approval. The certificate will also fix the ratio of apprentices to journeymen that will be used in the performance of the contract. The ratio of apprentices to journeymen in such cases will not be less than one to five except:

a) When employment in the area of coverage by the joint apprenticeship committee has exceeded an average of 15 percent in the 90 days before the request for certificate, or

b) When the number of apprentices in training in the area exceeds a ratio of one to five, or

c) When the trade can show that it is replacing at least 1/30 of its membership through apprenticeship training on an annual basis state-wide or locally, or

d) When the Contractor provides evidence that the Contractor employs registered apprentices on all of his contracts on an annual average of not less than one apprentice to eight journeymen.

The Contractor is required to make contributions to funds established for the administration of apprenticeship programs if the Contractor employs registered apprentices or journeymen in any apprenticeable trade on such contracts and if other contractors on the public works site are making such contributions.

The Contractor and any subcontractor will comply with Labor Code §§ 1777.5 and 1777.6 in the employment of apprentices.

Information relative to apprenticeship standards, wage schedules and other requirements may be obtained from the Director of Industrial Relations, ex-officio the Administrator of Apprenticeship, San Francisco, California, or from the Division of Apprenticeship Standards and its branch offices.

7-2.4 RECORD OF WAGES PAID: INSPECTION

Every Contractor and subcontractor will keep an accurate certified payroll records showing the name, occupation, and the actual per diem wages paid to each worker employed in connection with the Work. The record will be kept open at all reasonable hours to the inspection of the body awarding the contract and to the Division of Labor Law Enforcement. If requested by the City, the Contractor will provide copies of the records at its cost.

7-3 LIABILITY INSURANCE

Subsection 7-3, Liability Insurance, of the Green Book is deleted in its entirety and replaced by the following subsections.

7-3.1 GENERAL

Contractor must procure and maintain for the duration of the contract the following insurance coverage against claims for injuries to persons or damage to property that may arise from or in connection with the performance of the work covered by this agreement by the Contractor, its agents, representatives, employees or subcontractors:

COVERAGE PER OCCURRENCE	ISO FORM	COMBINED SINGLE LIMIT
Comprehensive General Liability	GL 00 02 01 85 or 88	$3,000,000
Business Auto	CA 00 01 01 87	$1,000,000
Workers' Compensation		Statutory Requirement
Pollution Liability		$1,000,000

Contractor will provide endorsements or other proof of coverage for contractual liability.

Combined single limit per occurrence will include coverage for bodily injury, personal injury, and property damage for each accident.

If Commercial General Liability Insurance or other form with a general aggregate limit is used, the policy will be endorsed such that the general aggregate limit will apply separately to this contract and a copy of the endorsement provided to the City.

Liability policies will contain, or be endorsed to contain the following provisions:

GENERAL LIABILITY AND AUTOMOBILE LIABILITY:

The City, its officers, officials, employees, agents, and volunteers will be covered as insureds as respects: liability arising out of activities performed by or on behalf of the Contractor; products and completed operations of the Contractor; premises owned, occupied or used by the Contractor; or automobiles owned, leased, hired or borrowed by the Contractor. The coverage will contain no special limitations on the scope or protection afforded to the City, its officers, officials, employees, agents, or volunteers.

The Contractor's insurance coverage will be primary insurance as respects the City, its officers, officials, employees, agents, and volunteers. Any insurance or self-insurance maintained by the City, its officers,

officials, employees, agents, and volunteers will be excess of the Contractor's insurance and will not contribute with it.

Any failure to comply with reporting provisions of the policies will not affect coverage provided to the City, its officers, officials, employees, agents and volunteers.

The Contractor's insurance will apply separately to each insured against whom claim is made or suit is brought, except with respect to the limits of the insurer's liability.

WORKERS' COMPENSATION:

The insurer will agree to waive all rights of subrogation against the City, its officers, officials, employees and volunteers for losses arising from work performed by the Contractor for the City.

ALL COVERAGES:

Each insurance policy required by this subsection will be endorsed to state that coverage will not be suspended, voided, cancelled by either party, reduced in coverage or in limits except after thirty (30) days written notice by certified mail, return receipt requested, has been given to:

DIRECTOR OF PUBLIC WORKS
City of Bellflower
16600 Civic Center Drive
Bellflower, CA 90706

Notwithstanding the foregoing, the endorsement may state that insurance may be cancelled upon ten (10 day notification for non-payment of premium. The Contractor will provide the City with updated proof of insurance should the Contract Time extend beyond the policy expiration date.

All liability insurance will be on an occurrence basis. Insurance on a claims made basis will be rejected. Any deductibles or self-insured retentions will be declared to and approved by City. The insurer will provide an endorsement to City eliminating such deductibles or self-insured retentions as respects the City, its officials, employees, agents, and volunteers.

Except for Workers Compensation Insurance, Contractor will furnish to City certificates of insurance and endorsements on forms acceptable to the City’s City Attorney, duly authenticated, giving evidence of the insurance coverages required in this contract and other evidence of coverage or copies of policies as may be reasonably required by City from time to time. Endorsements must be supplied on ISO Form No. CG 20 10 11 85, or equivalent. Certificate/endorsement for Workers Compensation

Insurance will be furnished on State Comp Fund or other industry standard form. Except for worker's compensation insurance, all insurance required herein will be placed with insurers with a Best's Rating of not less than A:VII. Worker's compensation insurance policies will meet the requirements of California law.

All subcontractors employed on the work referred to in this contract will meet the insurance requirements set forth for Contractor. Contractor will furnish certificates of insurance and endorsements for each subcontractor at least five days before the subcontractor entering the job site, or Contractor will furnish City an endorsement including all subcontractors as insureds under its policies.

Except as provided in Subsection 6-10, the Contractor will save, keep and hold harmless the City, its officers, officials, employees, agents and volunteers from all damages, costs or expenses in law or equity that may at any time arise or be claimed because of damages to property, or personal injury received by reason of or in the course of performing work, which may be caused by any willful or negligent act or omission by the Contractor or any of the Contractor's employees, or any subcontractor. The City will not be liable for any accident, loss or damage to the work before its completion and acceptance, except as provided in Subsection 6-10.

The cost of such insurance will be included in the various items of work in the Contractor's bid and no additional compensation for purchasing insurance or additional coverages needed to meet these requirements will be allowed.

In the event that any required insurance is reduced in coverage, cancelled for any reason, voided or suspended, Contractor agrees that City may arrange for insurance coverage as specified, and Contractor further agrees that administrative and premium costs may be deducted from payments due to the Contractor. Contractor will not be allowed to work until alternate coverage is arranged.

Coverage will not extend to any indemnity coverage for the active negligence of the additional insured if the agreement to indemnify the additional insured would be invalid under Civil Code § 2782(b).

7-3.2 Indemnification and Defense

In addition to the provisions of Subsection 7-3 of the Green Book as between the City and Contractor, Contractor will take and assume all responsibility for the work as stated herein or shown on the plans.

The Contractor will bear all losses and damages directly or indirectly resulting to it, to the City, its officers, employees, and agents, or to others on account of the performance or character of the work, unforeseen

difficulties, accidents, traffic control, job site maintenance, or any other causes whatsoever.

The Contractor will assume the defense of and indemnify and save harmless the City of Bellflower, its officers, employees, and agents, from and against any and all claims, losses, damage, expenses and liability of every kind, nature, and description, directly or indirectly arising from the performance of the contract or work, regardless of responsibility for negligence, and from any and all claims, losses, damage, expenses, and liability, howsoever the same may be caused, resulting directly, or indirectly from the nature of the work covered by the contract, regardless of responsibility for negligence, to the fullest extent permitted by law. In accordance with Civil Code § 2782, nothing in this Subsection 7-3.2 or in Subsection 7-3 of the Standard Specifications will require defense or indemnification for death, bodily injury, injury to property, or any other loss, damage or expense arising from the sole negligence or willful misconduct of the City, or its agents, servants or independent contractors who are directly responsible to the City, or for defects in design furnished by such persons. Moreover, nothing in this Subsection 7-3.2 or in Subsection 7-3 will apply to impose on the Contractor, or to relieve the City from, liability for active negligence of the City.

The City does not, and will not, waive any rights against the Contractor which it may have by reason of the aforesaid hold harmless agreements because of the acceptance by the City, or deposit with City by Contractor, of any insurance policies described in Subsection 7-3 of the Special Provisions. This hold harmless agreement by the Contractor will apply to all damages and claims for damages of every kind suffered, or alleged to have been suffered by reasons of any of the aforesaid operations of Contractor, or any subcontractor, regardless of whether or not such insurance policies are determined to be applicable to any of such damages or claims for damages.

No act by the City, or its representatives in processing or accepting any plans, in releasing any bond, in inspecting or accepting any work, or of any other nature, will in any respect relieve the Contractor or anyone else from any legal responsibility, obligation or liability he might otherwise have.

7-5 PERMITS

The following paragraph will be added to Subsection 7-5 of Green Book:

The Contractor will apply for permits required by the City Public Works Department. These permits will be issued on a “no-fee” basis. However, the Contractor must pay for and obtain all other permits from other governmental and utility agencies necessitated by their operations.

All bonding fees, (overweight and oversized vehicle permit fees)

inspection permit fees or other fees charged or required for such permits must be paid by the Contractor. These costs will be included in the bid item provided. If no bid item is included, costs will be included in the various items of work, and no additional payment will be allowed.

7-8.1 CLEANUP AND DUST CONTROL

Subsection 7-8.1, Cleanup and Dust Control, of the Green Book is deleted in its entirety and replaced by the following subsections.

7-8.1.1 GENERAL

On any construction project requiring trenching within public streets and for which total trenching is in excess of 500 feet, the Contractor will be required to sweep the worksite utilizing a pick-up type street sweeper a minimum of once daily.

7-8.1.2 WATERING

Water for the laying of dust caused by Contractor's operations or the passage of traffic through the work will be applied as necessary or as directed by the Engineer. Water for the above or other purposes may be obtained from any approved source. If the Contractor chooses to use a City fire hydrant upon placing a $300 meter deposit and the payment of a $50 service fee, the Engineer will cause a meter to be installed. All water used from the hydrant will be metered and charged to the Contractor at the prevailing rate plus the current daily meter rental rate. The Contractor will be charged a $15 reconnect fee if the Contractor wishes to move the meter to a different hydrant. Costs of water to be used will be included in the cost of various bid items.

7-8.6 WATER POLLUTION CONTROL

This section is supplemented by the addition of the following requirements which establish storm water and urban runoff pollution prevention controls.

(a) Storm or construction generated water containing sediment such as, construction waste, soil, slurry from concrete/asphalt concrete saw cutting operations, clean up of concrete transit mixers or other pollutants from construction sites and parking areas will be retained or controlled on site and will not be permitted to enter the storm drain system.

(b) Temporary sediment filtering systems such as sandbags, silt fences, or gravel berms will be utilized to trap sediment so that only filtered water enters the City's storm drain system. Proper clean up and disposal of settled sediment and the filtering system will be the responsibility of the CONTRACTOR.

(c) Discharge of concrete transit mixer wash water on to approved dirt areas (sub-grade area designated for new concrete construction for example) is acceptable. Discharge on to private property, parkway areas, or the street is not permitted.

(d) Plastic or other impervious covering will be installed where appropriate to prevent erosion of an otherwise unprotected area, along with any other runoff control devices deemed appropriate by the City.

(e) Excavated soil stored on the site will be covered in a manner that minimizes the amount of sediments running into the storm drain system, street or adjoining properties.

(f) No washing of construction or other industrial vehicles and equipment will be allowed adjacent to a construction site. During the rainy season (October 15 to April 15), Contractor will keep at the construction site sufficient materials and labor to install temporary sediment filtering systems and other water pollution prevention control measures. These control measures will be in place and maintained by the Contractor on a daily basis on days when construction is not in progress due to rain.

(h) All costs associated with water pollution control will be borne by the Contractor. Any expense incurred by the City to expeditiously respond to storm drain contamination resulting from Contractor's failure to implement water pollution control measures will be charged to the Contractor.

7-9 PROTECTION AND RESTORATION OF EXISTING IMPROVEMENTS

Section 7-9 is supplemented by the following additional requirements:

Where existing traffic striping, pavement markings, and curb markings are damaged or their reflectively reduced by the Contractor's operations, such striping or markings will also be considered as existing improvements and the Contractor will replace such improvements.

Relocations, repairs, replacements, or re-establishments will be at least equal to the existing improvements and will match such improvements in finish and dimensions unless otherwise specified.

7-10 PUBLIC CONVENIENCE AND SAFETY

Section 7-10 is supplemented by the following additional requirements:

Unless otherwise specified all traffic control will be performed in accordance with the Work Area Traffic Control Handbook (WATCH) Latest Edition, published by Building News, 3055 Overland Avenue, Los Angeles,

CA 90034, telephone 310-474-7771.

7-10.1 TRAFFIC AND ACCESS

The Contractor will notify the occupants of all affected properties at least 48 hours prior to any temporary obstruction of access. Vehicular access to property line will be maintained except as required for construction for a reasonable period of time. No overnight closure of any driveway will be allowed except as permitted by the Engineer.

At least one (1) twelve (12) foot wide traffic lane will be provided for each direction of travel on all streets at all times except as permitted by the Engineer. The traffic lanes will be maintained on pavement, and will remain unobstructed. All work requiring that a lane be closed or a lane moved right or left will be noticed to the traveling public by use of City approved lighted arrow boards.

Clearances from traffic lanes will be five feet to the edge of any excavation and 2 feet to the face of any curb, pole, barricade, delineator, or other vertical obstruction.

One four (4) foot wide paved pedestrian walkway will be maintained in the parkway area on each side of all streets. The clearance from the pedestrian walkway to any traffic lane will be five (5) feet. Pedestrians and vehicles will be protected from all excavations, material storage, and/or obstructions by the placement of an adequate number of lighted barricades (minimum two (2)) at each location, one (1) at each end of the obstruction or excavation), which will have flashing lights during darkness. Barricades will be Type I or Type II per Section 7-3 and lights will be Type A per Section 7-6 of the “Work Area Traffic Control Handbook” (WATCH).

7-10.2 STREET CLOSURES, DETOURS, BARRICADES

Street closures will not be allowed except as specifically permitted by the Engineer.

The Contractor will prepare any traffic control or detour plans that may be required as directed by the Engineer. Lane transitions will not be sharper than a taper of thirty (30) to one (1).

Temporary traffic channelization will be accomplished with barricades or delineators. Temporary striping will not be allowed unless specifically permitted by the Engineer. The Contractor will prepare any plans that may be required for temporary striping to the satisfaction of the Engineer. In no event will temporary striping be allowed on finish pavement surfaces, which are to remain.

Where access to driveway or street crossings need to be maintained, minimum 1 1/4 inch thick steel plating will be used to bridge the trench. All

steel plating will have temporary asphalt concrete 1:12 minimum sloped ramps to assist vehicles to cross comfortably over the plates and have a non-skid surface. Plates subject to vehicle high traffic speeds and in residential areas will be secured by welding at the discretion of the Engineer.

7-10.5 PROTECTION OF THE PUBLIC

It is part of the service required of the Contractor to make whatever provisions are necessary to protect the public. The Contractor will use foresight and will take such steps and precautions as his operations warrant to protect the public from danger, loss of life or loss of property, which would result from interruption or contamination of public water supply, interruption of other public service, or from the failure of partly completed work or partially removed facilities. Unusual conditions may arise on the Project which will require that immediate and unusual provisions be made to protect the public from danger or loss of life, or damage to life and property, due directly or indirectly to prosecution of work under this contract.

Whenever, in the opinion of the Engineer, an emergency exists against which the Contractor has not taken sufficient precaution for the public safety, protection of utilities and protection of adjacent structures or property, which may be damaged by the Contractor's operations and when, in the opinion of the Engineer, immediate action will be considered necessary in order to protect the public or property due to the Contractor's operations under this contract, the Engineer will order the Contractor to provide a remedy for the unsafe condition. If the Contractor fails to act on the situation immediately, the Engineer may provide suitable protection to said interests by causing such work to be done and material to be furnished as, in the opinion of the Engineer, may seem reasonable and necessary.

The cost and expense of said labor and material, together with the cost and expense of such repairs as are deemed necessary, will be borne by the Contractor. All expenses incurred by the City for emergency repairs will be deducted from the progress payments and the final payment due to the Contractor. Such remedial measures by the City will not relieve the Contractor from full responsibility for public safety.

7-15 HAZARDOUS MATERIAL

The following Subsection will be added to Section 7 of the Green Book:

For any excavation, which extends more than four feet below existing grade, the Contractor will promptly, and before the conditions are disturbed, notify the Engineer, in writing, of 1) any material that the Contractor believes may be hazardous waste, as defined in Health and Safety Code § 25117, which is required to be removed to a Class I, Class

II, or Class III disposal site in accordance with provisions of existing law, 2) subsurface or latent physical conditions at the site differing from those indicated, or 3) unknown physical conditions at the site of any unusual nature, different materially from those ordinarily encountered and generally recognized as inherent in work of the character provided for in the Contract Documents.

After receiving notice from the Contractor, the Engineer will promptly investigate any condition identified by the Contractor as being hazardous. The rights and obligations of the City and the Contractor with regard to such conditions (including, without limitation, the procedures for procuring change orders and filing claims) will be specified by the provisions of Subsection 3-4 (Changed Conditions) of the Green Book.

If a dispute arises between the City and the Contractor whether the conditions materially differ, involve hazardous waste, or cause a change in the Contractor's cost or time required for performance of the work, the Contractor will not be excused from any scheduled completion date provided for by the contract, but will proceed with all work to be performed under the contract. The Contractor will retain all rights provided by Subsection 3-5, Disputed Work, of the Green Book.

If the Engineer determines that material called to the Engineer's attention by the Contractor is hazardous waste, or if the Engineer otherwise discovers the existence of hazardous waste, the Contractor will be responsible for removal and disposal of the hazardous waste by qualified personnel and appropriate equipment in the manner required by law as directed by the Engineer, subject to the provisions of Section 3 (Changes in Work) of the Green Book.

9-2 LUMP SUM WORK

Subsection 9-2, Lump Sum Work, of the Green Book is deleted in its entirety and replaced by the following:

Items for which quantities are indicated as "Lump Sum," "L.S.," or "Job" will be paid for at the price indicated in the Proposal. Such payment will be full compensation for all costs for labor, equipment, materials and plant necessary to furnish, construct and install the lump sum item of work, complete, in place, and for all necessary appurtenant work, including, but not limited to, all necessary cutting, patching, repair and modification of existing facilities, and clean up of site.

Contractor will furnish three copies of a detailed schedule, which breaks down the lump sum work into its component parts and cost for each part, in a form and sufficiently detailed as to satisfy Engineer that it correctly represents a reasonable apportionment of the lump sum. This schedule is subject to approval by Engineer as to both the components into which the lump sum item is broken down, and the proportion of cost attributable to

each component.

This schedule will be the basis for progress payments for the lump sum work.

9-3.2 PARTIAL AND FINAL PAYMENTS

The text of Subsection 9-3.2 of the Standard Specifications is hereby deleted and replaced with the following:

The closure date for the purpose of making partial progress payments will be the last working day of each month. The Contractor will prepare the partial payment invoice with measurement of the work performed through the closure date and submit it to the City for approval.

When work is complete, the Contractor will determine the final quantities of the work performed and prepare the final progress payment, and submit it to the Engineer for approval.

It will take a minimum of thirty-five (35) calendar days from the date of approving the Contractor's invoice to make the payment to the Contractor. However, payments will be withheld pending receipt of any outstanding reports required by the contract documents, or legal release of filed Stop Payment Notices against the Contractor. In addition, the final progress payment will not be released until the Contractor returns the control set of Plans and Specifications showing the as-built conditions.

The full five percent (5%) retention will be deducted from all progress payments. The Contractor will make a payment request for the retained amount, for approval by the City, upon field acceptance of the work by the City Engineer. The City Engineer upon field acceptance and receipt of the final as-built plans and any other reports or documents required to be provided by the Contractor will process a recommendation to the City Council for acceptance of the work. Not less than thirty-five (35) calendar days from the City Council acceptance of the work, the Contractor's final payment will be made provided Stop Payment Notices or other claims have not been filed against the Contractor and/or the City by material suppliers, sub-contractors, other governmental agencies, and private property owners. Until these Stop Payment Notices are released and claims are resolved the stop payment/claim amount will be withheld from the final payment.

The Contractor, however, may receive interest on the retention for the length of construction, or receive the retention itself as long as the retention is substituted with escrow holder surety or equal value.

At the request and expense of the Contractor, surety equivalent to the retention may be deposited with the State Treasurer, or a State or Federally chartered bank, as the escrow agent, who will pay such surety

to the Contractor upon satisfactory completion of the contract.

Pursuant to PCC § 22300, the Contractor may substitute securities for retention monies held by the City or request that the City place such monies into an escrow account. The Contractor is notified, pursuant to PCC § 22300, that any such election will be at the Contractor's own expense and will include costs incurred by the City to accommodate the Contractor's request.

Progress payment paid by the City as contemplated herein, will be contingent upon the Contractor submitting, in addition to any additional documents, an updated Contract Schedule in the form prescribed by these Contract Documents. Failure of the Contractor to submit an acceptable updated Contract Schedule will result in the City withholding partial payment, without liability to the City, until such an acceptable updated Contract Schedule is submitted. Nothing herein will allow the Contractor to suspend or slow progress of the Work.

A City Council resolution established a Project Payment Account, encumbered money in the current budget, and assigned that money to the Project Payment Account which is the sole source of funds available for payment of the Contract Sum. Contractor understands and agrees that Contractor will be paid only from this special fund and if for any reason this fund is not sufficient to pay Contractor, Contractor will not be entitled to payment. The availability of money in this fund, and City's ability to draw from this fund, are conditions precedent to City's obligation to make payments to Contractor.

9-3.3 DELIVERED MATERIALS

Materials and equipment delivered or stored, but not incorporated into the work, will not be approved for progress payments.

100-1 TERMINATION OF AGENCY LIABILITY

Before receiving final payment, the Contractor will execute a Release on Contract" form which will operate as, and will be a release to the City, the City Council, and each member of the City Council and their agencies, from all claims and liability to the Contractor for anything done or furnished for, or relating to, the work or for any act of neglect of the City of any person relating to or affecting the work, except the claim against the City for the remainder, if any there be, of the amounts kept or retained as provided in Subsections 9-3 of the Special Provisions and except for any unsettled claims listed on said form which have been filed in compliance with the requirements for making claims.

CITY OF BELLFLOWER

MISCELLANEOUS CONCRETE IMPROVEMENTS

SPECIFICATIONS NO. 14/15-05

TECHNICAL PROVISIONS

SECTION 300 - EARTHWORK

300-1 CLEARING AND GRUBBING

300-1.3 Removal and Disposal of Materials

300-1.3.2 Requirements

ADD the following text after paragraph a):

Contractor shall be responsible for removing all weeds, plants, and shrubs found within existing and areas of new installation of sidewalk, driveway aprons, alley approaches, walls, retaining curbs, and curb ramps.

ADD the following text after paragraph c):

Maintaining dust control at all times by watering while maintaining best management practices (BMP's).

Removal and disposal of any additional items not specifically mentioned herein, which may be found within the work limits or are shown on the plans to be removed.

Removal and disposal of unnamed concrete improvements.

Restoration and clean-up of the site.

Protecting in place existing valve covers, telephone and power poles, fire hydrants, curbs, fences, walls, and other existing structures.

Removing and relocating all sprinkler lines, heads, valves, etc. interfering with construction of improvements.

No excavated or demolition materials will be left in the public right of way overnight.
All existing improvements to be joined shall be cut in a clean straight line along the join line by use of a concrete cutting saw. Compensation for this requirement shall be

considered as included in the price bid in the proposal form and no additional compensation will be allowed therefore.

Sawcutting shall consist of cutting existing Portland cement concrete to facilitate its removal. Cutting shall be accomplished by the use of a power driven saw. The depth of the cut shall be deep enough to provide a clean, straight break without loosening, cracking, or damaging adjoining asphalt or concrete. Under this item, the use of a grinder will not be allowed in lieu of power-driven saw. Residue from sawcutting shall be vacuumed up while sawcutting.

ADD the following sub-section:
Root Pruning and Root Shaving

The contractor shall be required to contact City Certified Arborist for review prior to any root pruning or shaving operations. Once the roots are exposed, the City Certified Arborist shall review and approve the limits and methods of pruning which are prescribed. The contractor shall not remove more than is prescribed by the City Certified Arborist. The maximum extent of the root pruning under this work item shall be within the excavation limits and to the depth of the prescribed excavation.

300-1.4 Payment
ADD the following text:

Payment for **Root Pruning and Root Shaving** shall be included under the bid item **Clear, Grub, and Sod** shall be at the unit bid price for **Lump Sum (LS).** Payment shall include all work directly associated with the pruning, removal, haul away, and disposal of the roots to facilitate the construction of proposed improvements and no additional compensation will be allowed therefore.

SECTION 303 – CONCRETE AND MASONRY CONSTRUCTION

303-5 CONCRETE CURBS, WALKS, GUTTER, CROSS GUTTERS, ALLEY INTERSECTIONS, ACCESS RAMPS, AND DRIVEWAYS.

303-5.1 Requirements
303-5.1.1 General
ADD the following subsections:

303-5.1.1.1 Curbs, Gutters & Depressed Curbs

Curb and gutter shall be per SPPWC Standard Plan No. 120-1.

Depressed curb and gutter shall be constructed per SPPWC Standard Plan No. 110-2. The limits of the curb and gutter shall be from top of x to top of x at the noted driveway approach and shall include all curb and gutter from the existing back of curb to lip of gutter. The more stringent of the following curb and gutter specifications listed below or standard plan specifications shall apply to the depressed curb and gutter.

All work within the ~~1'~~ six (6) foot of AC next to the gutter shall be part of the bid item remove, dispose, and replace curb and gutter.

Concrete curb and gutter and curb only shall be constructed to the line and grades as determined in the field or as ordered by the Engineer. Existing curb and gutter to be joined shall be sawcut on a neat, straight line at the join location.

303.5.1.1.3 Sidewalk

Concrete sidewalk shall be per SPPWC Standard Plan 112-1 as indicated on the plans. Concrete shall be Class 520-C-2500.

Concrete sidewalk shall be constructed to the line, grades and designs shown on the plans or as ordered by the Engineer. Existing surfaces to be joined shall be sawcut on a neat, straight line at the join location. Any and all gas or water meter boxes falling within the limits of sidewalk construction shall be adjusted to the finished grade of the new sidewalk. The Contractor shall remove and replace any new concrete work with graffiti markings and blemishes at no additional cost to the City.

Prior to placement of new sidewalk, contractor shall grind or prune all obstructing roots if present under the direction of the City Certified Arborist.

A sidewalk 1/4-inch radius edging tool is to be used to finish the back edge of all curbs. Sidewalk score lines shall have a minimum finished depth of 1/4-inch. Walkway replacement needed to join new sidewalk shall be in kind to the walkway removed or as directed by the Engineer or his designee.

Any appurtenant PCC Improvement constructed as part of this project and not included with a unit price bid quote or otherwise covered for payment herein shall be paid at the unit price for four inch sidewalk per square foot prorated to reflect the true amount of PCC material being constructed, as approved by the Engineer or his designee. The prorated unit price bid for the appurtenant PCC improvement shall include all costs of subgrade preparation, excavation, furnishing and compacting of backfill material and no additional compensation will be allowed therefore.

303-5.1.1.4 Remove and Replace Curb Ramp

Concrete curb ramps shall be per SPPWC Standard Plan 111-4, case and type per plans or per direction by the Engineer or his designee. Concrete shall be Class 520-C-2500.

Curb and Gutter shall be included in the limits of the curb ramp which includes the sawcutting and full AC reconstruction of a three (3) foot wide portion of AC pavement adjacent to the curb and gutter.

All work within the three (3) foot of AC in front of the gutter from B.C.R. to E.C.R. shall be considered as part of the curb ramp. Three (3) foot of AC next to the gutter shall be removed, disposed, and replaced.

Concrete curb ramps shall be constructed to the line, grades and designs shown on the plans or as directed by the Engineer or his designee. Existing surfaces to be joined shall be sawcut on a neat, straight line at the join location. All sawcut locations along existing cross gutters shall be cut in a curve conforming to the existing curb return and shall be cut at a set offset from the flow line as approved by the City Engineer. The flow line shall be maintained, ensuring that ponding does not occur in the existing cross gutter.

Any and all traffic signal, gas or water meter boxes falling within the limits of curb ramp construction shall be adjusted to the finished grade of the new curb ramp and shall be included in the base unit price per ramp. The Contractor shall remove and replace any new concrete work with graffiti markings and blemishes at no additional cost to the City.

All curb ramps shall have a detectable warning surface that extends the full width of the ramp and 3 feet minimum length.

The City Engineer or his designee shall have final say regarding the case and type of curb ramp to be installed and shall retain the right to revise the ramp designation at any point prior to construction.

Should there be walkways on the backside of the curb ramp or joining into the curb ramp, the reconstruction of the walkway to ADA compliance, including the retaining curbs shall be included as part of the unit bid price of the curb ramp.

303-5.1.3 Alley Approach

All alley approach construction shall be per Standard Specifications for Public Works Construction (SSPWC) Standard Plan 130-2 as indicated on the plans

Curb and gutter shall be included in the limits of the alley approach which includes the sawcutting and full AC reconstruction of a three (3) foot wide portion of AC pavement adjacent to the curb and gutter as well as on the back side of the sidewalk if the alley is constructed with AC pavement. This may include the replacement of concrete swale and/or drain if it falls inside the three (3) foot.

Alley approaches shall be constructed to the line, grades and designs shown on the plans or as directed by the Engineer. Existing surfaces to be joined shall be sawcut on a neat, straight line at the join location. Any and all gas or water meter boxes falling within the limits of the driveway entrance construction shall be adjusted to the finished grade of the new driveway. The Contractor shall remove and replace any new concrete work with graffiti markings and blemishes at no additional charge to the City.

303-5.1.3.1 Drive Apron

All drive apron construction shall be per City of Bellflower Standard Plan BSP-01, BSP-02, BSP-03, or BSP-04 as indicated on the plans.

Curb and gutter shall be included in the limits of the drive apron which includes the sawcutting and full AC reconstruction of a three (3) foot wide portion of AC pavement adjacent to the curb and gutter as well as three (3) feet on the back side of the sidewalk.

Drive approaches shall be constructed to the line, grades and designs shown on the plans or as directed by the Engineer. Existing surfaces to be joined shall be sawcut on a neat, straight line at the join location. Any and all gas or water meter boxes falling within the limits of the driveway entrance construction shall be adjusted to the finished grade of the new driveway. The Contractor shall remove and replace any new concrete work with graffiti markings and blemishes at no additional charge to the City.

Concrete for all drive aprons constructed shall be 6” thick PCC.

303-5.1.4 Detectable Warning Surface

Curb ramp detectable warning surface shall consist of raised truncated domes constructed or installed on curb ramps. Detectable warning surface for all new ramp construction shall be cast-in-place or stamped into the surface of the curb ramp. The only exception shall be those ramps that are to remain in place and be fitted with a new detectable warning surface, which shall be a prefabricated surface installed on the existing curb ramp. The color of the detectable warning surface shall be blue and shall be provided through AccessTile or approved equal. The contractor shall provide a color and material sample for City approval prior to installation of truncated warning surface.

Prefabricated detectable warning surface shall be in conformance with the requirements established by the Department of General Services, Division of State Architect and in conformance with the manufacturer’s recommendations. The manufacturer shall provide a written 5-year warranty for prefabricated detectable warning surfaces, guaranteeing replacement when there is a defect in the dome shape, color fastness, sound-on-cane acoustic quality, resilience, or attachment. The warranty period shall begin upon acceptance of the contract.

303-5.1.4.1 Measurement and Payment

Measurement for Detectable Warning Surface shall be on an Each Item installed basis and shall only include detectable warning surfaces which have been retrofitted to existing ramps. All detectable warning surfaces installed along with a new ramp shall be measured and paid for under the Remove and Replace or Construct Curb Ramp w/ Armorcast Blue Truncated Domes bid item.

Payment for **Install Access Tile (Blue Truncated Domes)** shall be at the unit bid price for Each (EA) and shall be considered full compensation for furnishing labor, materials, equipment, and disposal to complete the construction as indicated and no additional compensation will be allowed therefore.

303-5.9 Measurement and Payment
ADD the following text:

Payment for **Reconstruct Alley Approach and Install Truncated Domes** shall be at the unit bid price for **Each Item (EA)** and shall be considered full compensation for furnishing labor, materials, equipment, and disposal to complete the construction, including the infill of six (6) foot wide full-depth AC pavement adjacent to the proposed concrete improvement, installation or retrofit of truncated domes at both sidewalk approaches to the alley, and no additional compensation will be allowed therefore.

Payment for **Remove and Replace 4" PCC Sidewalk** shall be on a **Square Foot (SF)** unit price basis and shall be considered full compensation for furnishing labor, materials, equipment, root pruning/root shaving, grinding, and disposal to complete the construction, including the any necessary adjacent backfill and sealant, adjustment of gas or water meter boxes to finish grade, as indicated and no additional compensation will be allowed therefore.

Payment for **Construct 4" PCC Sidewalk** shall be on a **Square Foot (SF)** unit price basis and shall be considered full compensation for furnishing labor, materials, equipment, root pruning/root shaving, grinding, and disposal to complete the construction, including the any necessary adjacent backfill and sealant, adjustment of gas or water meter boxes to finish grade, as indicated and no additional compensation will be allowed therefore.

Payment for **Construct Curb Ramps w/ Access Tile Blue Truncated Domes and Remove and Replace Curb Ramp w/ Access Tile Blue Truncated Domes** shall be at the unit bid price for **Each Item (EA)** and shall be considered full compensation for furnishing labor, materials, equipment, and disposal to complete the construction, including the infill of three (3) foot wide full-depth AC pavement adjacent to the proposed concrete improvement, and installation of the detectable warning surface and no additional compensation will be allowed therefore. Should there be walkways on the backside of the curb ramp or joining into the curb ramp, the reconstruction of the walkway to ADA compliance, including the retaining curbs shall be included as part of the unit bid price of the curb ramp.

Payment for **Remove and Replace Drive Apron** shall be on a **Square Foot (SF)** unit price basis and shall be considered full compensation for furnishing labor, materials, equipment, and disposal to complete the construction, including the infill of three (3) foot wide full-depth AC pavement adjacent to the proposed concrete improvement, curb and gutter, and no additional compensation will be allowed therefore.

Payment for **Construct 6" PCC Drive Aprons** shall be on a **Square Foot (SF)** unit price basis and shall be considered full compensation for furnishing labor, materials, equipment, and disposal to complete the construction, including the infill of three (3) foot wide full-depth AC pavement adjacent to the proposed concrete improvement, curb and gutter, and no additional compensation will be allowed therefore.

SECTION 313- OTHER CONSTRUCTION ITEMS

313-1 MOBILIZATION
313-1.1 General

Mobilization shall consist of preparatory work and operations including, but not limited to, those necessary for the movement of personnel, equipment, materials and incidentals to the project site necessary for work on the project and for all other work and operations which must be performed or costs incurred including bonds, insurance, and financing prior to beginning work on the various contract items on the project site.

Mobilization shall also include the cost, time and labor to move the necessary construction equipment to and from the job site, supervisory time on the job by the Contractor's personnel to keep the construction site in a safe condition and all other related work as required for all non-working days during the course of the construction. Contractor is responsible for securing an adequate storage site for equipment and materials.

The Contractor shall have on the work site at all times, as its agent, a competent English speaking superintendent capable of reading and thoroughly understanding the plans, specifications, other related documents, and directions from Owner's Representative.

313-1.2 Measurement and Payment

Payment for **Bonding, Mobilization & Insurance** shall be per the **Lump-Sum (LS)** price bid and shall include obtaining and paying for all permits and business licenses as required from the City of Bellflower and other related agencies. The City of Bellflower will waive its Public Works ROW Encroachment permit fee. The Contractor shall comply with the requirements specified by each license or permit. Progress payments for this item shall be paid in accordance with the completion percentage of the project to the Contractor, and shall include the costs of such mobilization and administration for the entire contract period including progress' schedule (CPM) as specified in these specifications. Payments shall be made upon the basis of the formula in Subsection 11-1.02 of the State of California Department of Transportation Standard Specifications dated May, 2006 (State Specifications) in lieu of the Standard Specifications for Public Works Construction method.

CALIFORNIA LABOR CODE
Division 3: Employment Relations
Chapter 2: Employer and Employee
Article 2: Obligations of Employer
Section 2810

2810. Contract for labor or services with construction, farm labor, garment, janitorial, or security guard contractor; Liability and civil penalties when contract does not provide sufficient funds to allow compliance with applicable law; Rebuttal presumption; Action

(a) A person or entity may not enter into a contract or agreement for labor or services with a construction, farm labor, garment, janitorial, or security guard contractor, where the person or entity knows or should know that the contract or agreement does not include funds sufficient to allow the contractor to comply with all applicable local, state, and federal laws or regulations governing the labor or services to be provided.

(b) There is a rebuttable presumption affecting the burden of proof that there has been no violation of subdivision (a) where the contract or agreement with a construction, farm labor, garment, janitorial, or security guard contractor meets all of the requirements in subdivision (d).

(c) Subdivision (a) does not apply to a person or entity who executes a collective bargaining agreement covering the workers employed under the contract or agreement, or to a person who enters into a contract or agreement for labor or services to be performed on his or her home residences, provided that a family member resides in the residence or residences for which the labor or services are to be performed for at least a part of the year.

(d) To meet the requirements of subdivision (b), a contract or agreement with a construction, farm labor, garment, janitorial, or security guard contractor for labor or services must be in writing, in a single document, and contain all of the following provisions, in addition to any other provisions that may be required by regulations adopted by the Labor Commissioner from time to time:

(1) The name, address, and telephone number of the person or entity and the construction, farm labor, garment, janitorial, or security guard contractor through whom the labor or services are to be provided.

(2) A description of the labor or services to be provided and a statement of when those services are to be commenced and completed.

(3) The employer identification number for state tax purposes of the construction, farm labor, garment, janitorial, or security guard contractor.

(4) The workers' compensation insurance policy number and the name, address, and telephone number of the insurance carrier of the construction, farm labor, garment, janitorial, or security guard contractor.

(5) The vehicle identification number of any vehicle that is owned by the construction, farm labor, garment, janitorial, or security guard contractor and used for transportation in connection with any service provided pursuant to the contract or agreement, the number of the vehicle liability insurance policy that covers the vehicle, and the name, address, and telephone number of the insurance carrier.

(6) The address of any real property to be used to house workers in connection with the contract or agreement.

(7) The total number of workers to be employed under the contract or agreement, the total amount of all wages to be paid, and the date or dates when those wages are to be paid.

(8) The amount of the commission or other payment made to the construction, farm labor, garment, janitorial, or security guard contractor for services under the contract or agreement.

(9) The total number of persons who will be utilized under the contract or agreement as independent contractors, along with a list of the current local, state, and federal contractor license identification numbers that the independent contractors are required to have under local, state, or federal laws or regulations.

(10) The signatures of all parties, and the date the contract or agreement was signed.

(e) (1) To qualify for the rebuttable presumption set forth in subdivision (b), a material change to the terms and conditions of a contract or agreement between a person or entity and a construction, farm labor, garment, janitorial, or security guard contractor must be in writing, in a single document, and contain all of the provisions listed in subdivision (d) that are affected by the change.

(2) If a provision required to be contained in a contract or agreement pursuant to paragraph (7) or (9) of subdivision (d) is unknown at the time the contract or agreement is executed, the best estimate available at that time is sufficient to satisfy the requirements of subdivision (d). If an estimate is used in place of actual figures in accordance with this paragraph, the parties to the contract or agreement have a continuing duty to ascertain the information required pursuant to paragraph (7) or (9) of subdivision (d) and to reduce that information to writing in accordance with the requirements of paragraph (1) once that information becomes known.

(f) A person or entity who enters into a contract or agreement referred to in subdivisions (d) or (e) shall keep a copy of the written contract or agreement for a period of not less than four years following the termination of the contract or agreement.

(g) (1) An employee aggrieved by a violation of subdivision (a) may file an action for damages to recover the greater of all of his or her actual damages or two hundred fifty dollars ($250) per employee per violation for an initial violation and one thousand dollars ($1,000) per employee for each subsequent violation, and, upon prevailing in an action brought pursuant to this section, may recover costs and reasonable attorney's fees. An action under this section may not be maintained unless it is pleaded and proved that an employee was injured as a result of a violation of a labor law or regulation in connection with the performance of the contract or agreement.

(2) An employee aggrieved by a violation of subdivision (a) may also bring an action for injunctive relief and, upon prevailing, may recover costs and reasonable attorney's fees.

(h) The phrase "construction, farm labor, garment, janitorial, or security guard contractor" includes any person, as defined in this code, whether or not licensed, who is acting in the capacity of a construction, farm labor, garment, janitorial, or security guard contractor.

(i) (1) The term "knows" includes the knowledge, arising from familiarity with the normal facts and circumstances of the business activity engaged in, that the contract or agreement does not include funds sufficient to allow the contractor to comply with applicable laws.

(2) The phrase "should know" includes the knowledge of any additional facts or information that would make a reasonably prudent person undertake to inquire whether, taken together, the contract or agreement contains sufficient funds to allow the contractor to comply with applicable laws.

(3) A failure by a person or entity to request or obtain any information from the contractor that is required by any applicable statute or by the contract or agreement between them, constitutes knowledge of that information for purposes of this section.

FINAL CLOSEOUT AGREEMENT AND RELEASE OF ALL CLAIMS

THIS AGREEMENT AND RELEASE OF ALL CLAIMS is made in Bellflower, California, this _____ day of _____, 20__ by and between THE CITY OF BELLFLOWER, hereinafter referred to as "AGENCY"; and _____, hereinafter referred to as "CONTRACTOR".

KNOW ALL MEN BY THESE PRESENTS:

The undersigned, as the authorized representative of CONTRACTOR, for and in consideration of _____ DOLLARS ($_____), to be paid to the CONTRACTOR, does hereby and for each of its successors, assigns and partners, release, acquit and forever discharge the AGENCY, and each of its successors, assigns, officers, agents, servants, consultants and employees, from any and all rights, claims, warranties, demands, debts, obligations, liabilities, actions, damages, costs, expenses and other claims whatsoever which might have been asserted against AGENCY by reason of any matter or thing which was the subject matter of or basis for:

1. The performance of all terms and conditions of that certain contract dated _____, 20__ for SPECIFICATIONS NO. _____, AGENT PROJECT NAME _____.

2. Change Order Nos. _____ through _____, inclusive, as approved by AGENCY and CONTRACTOR, pertaining to SPECIFICATIONS NO. _____;

3. The claim for equitable contract adjustment time extension required to complete all improvements for SPECIFICATIONS NO. _____, dated _____, 20__ in a timely manner and to the satisfaction of the City Engineer of AGENCY, as compromised and settled by Change Order No. _____ approved _____, 20__;

4. Claims, known or unknown, of any subcontractors of CONTRACTOR relating to SPECIFICATIONS NO. _____ and Change Order Nos. _____ through _____, inclusive relating thereto.

Excepting only the payment of the retained cash amount of $ _____ and the release of bonds to guarantee labor and materials payment and faithful performance.

The undersigned, as the authorized representative of AGENCY, for and in consideration of the CONTRACTOR'S completion of SPECIFICATIONS NO. _____, does hereby and for each of its successors, assigns and partners, release, acquit and forever discharge CONTRACTOR, and each of its successors, assigns, officers, agents, servants and employees from any and all rights, claims, warranties, demands, debts, obligations, liabilities, actions, damages, costs, expenses and other claims whatsoever which might have been asserted against CONTRACTOR by reason of any matter or thing which was the subject matter of or basis for:

Change Order Nos. _____ through _____, inclusive, as approved by AGENCY and CONTRACTOR, pertaining to SPECIFICATIONS NO. _____.

Excepting only CONTRACTOR'S completion of all work as specified by SPECIFICATIONS NO. _____.

Nothing contained herein shall waive or alter the rights, privileges and powers of the AGENCY or the duties, liabilities and obligations of the CONTRACTOR and its surety with respect to SPECIFICATIONS NO. _____.

All work for SPECFICATIONS NO. _____ shall be completed to acceptable standards and tolerances prior to execution of this agreement.

Upon execution of this agreement, the AGENCY agrees to immediately file and record a Notice of Completion with the County Recorder's Office to begin the statutory lien period. The AGENCY agrees the execution of this agreement commences the running time of any warranty or guarantee periods specified in the contract. The AGENCY and CONTRACTOR agree that the CONTRACTOR is liable for damages for delay, liquidated damages, in the amount of $ _____ for failure to complete the work specified in SPECIFICATIONS NO. _____ within _____ (___) working days, time allowed under Section _____ of SPECIFICATIONS NO. _____.

The presently retained amount $_____ is five percent (5%) of the total adjusted contract cost $_____, for SPECIFICATIONS NO. _____, less liquidated damages of $_____. Said retention monies will be released to the

CONTRACTOR at the expiration of the lien period thirty-five (35) calendar days after recordation of the Notice of Completion by the County Recorder's Office).

CONTRACTOR and AGENCY agree that the total adjusted contract price and time of performance for SPECIFICATIONS NO. _____ as follows:

ORIGINAL CONTRACT PRICE $_____ _____ working days

CHANGE ORDER	DESCRIPTION	ADD (DEDUCT) AMOUNT	TIME EXTENSION
TOTAL CHANGE ORDER NOS. _____-____		_____	_____

FINAL ADJUSTED CONTRACT PRICE $ _____ _____ working days

The final completion date of the work for SPECIFICATIONS NO. _____ is _____, 20__.

It is understood and agreed by the undersigned the facts with respect to which the foregoing release is given may hereafter turn out to be other than or different from the facts now known to be or believed by said undersigned to be true, and the undersigned hereto expressly assume the risk of the facts turning out to be different than they now appear, and agree that the foregoing Release shall be, in all respects, effective and not subject to termination or rescission by any such difference in facts. The undersigned hereby expressly waive any and all rights the undersigned have or may have under California Civil Code Section 1542, which provides as follows:

> "A general release does not extend to claims which the creditor does not know or suspect to exist in his favor at the time of executing the Release which if known by him must have materially affected his settlement with the debtor."

It is understood and agreed that this settlement is a compromise of doubtful and disputed claims, and that the releases made by the CONTRACTOR and AGENCY herein are not to be construed as an admission or admissions of liability on the part of either party and that the parties deny liability thereof and intend merely to avoid litigation and to buy their peace.

The undersigned agree they will forever refrain and forebear from commencing, instituting or prosecuting any lawsuit, action or other proceeding against the other party based on, arising out of, or in any way connected with the subject matter of this Release of All Claims.

The CONTRACTOR hereby releases and agrees to indemnify the AGENCY for all claims, including those of its Subcontractors for any and all delay and impact costs.

The terms of this release shall not excuse the responsibility of the CONTRACTOR to guarantee all work for a period of one (1) year from the date of acceptance of all improvements by the AGENCY. CONTRACTOR shall repair and replace any and all improvements damaged or failed (ordinary wear and tear, and usual abuse or neglect accepted) and shall maintain the original Faithful Performance Bond in full force and effect for the entire guarantee period.

The CONTRACTOR represents and warrants to the AGENCY the CONTRACTOR has not heretofore assigned, or transferred, or purported to assign or transfer to any person, firm, corporation, association or entity any of the rights, claims, warranties, demands, debts, obligations, liabilities, actions, damages, costs, expenses and other claims whatsoever and the CONTRACTOR agrees to indemnify and hold harmless the AGENCY against, without limitation, any and all rights, claims, warranties, demands, debts, obligations, liabilities, actions, damages, costs, expenses and other claims, including attorneys' fees, arising out of or connected with any such assignment or transfer or purported assignment or transfer.

The undersigned acknowledge they have been represented by counsel of their own choice in connection with the preparation and execution of this mutual Release of All Claims in full, and understand, and voluntarily consent, and agree to each and every provision contained herein.

The undersigned further declare and represent no promise, inducement or agreement, not herein expressed, has been made to the undersigned and this Release of All Claims contains the entire agreement among the parties hereto regarding the subject matter hereof and the terms of this Release of All Claims are contractual and not a mere recital.

The persons executing this Release of All Claims represent and warrant to the other party that the execution and performance of the terms of this Release of All Claims have been duly authorized by all requisite corporate, partnership, individual or other entity requirements and that said persons have the right, power, legal capacity and authority to execute and enter into this Release.

Executed this _____ day of _____, 20__ at Bellflower, California.

CITY:

_____
City Manager – City of Bellflower

ATTEST:

_____
City Clerk – City of Bellflower

APPROVED AS TO FORM:

_____
City Attorney – City of Bellflower

CONTRACTOR:

_____
(Name of Contractor, Company or Corporation)

Telephone No. _____

By: _____
(Print)

_____
(Signature)

_____
(Title)

NOTE: SIGNATURE'S OF CORPORATE AND SURETY OFFICIALS MUST BE NOTARIZED.

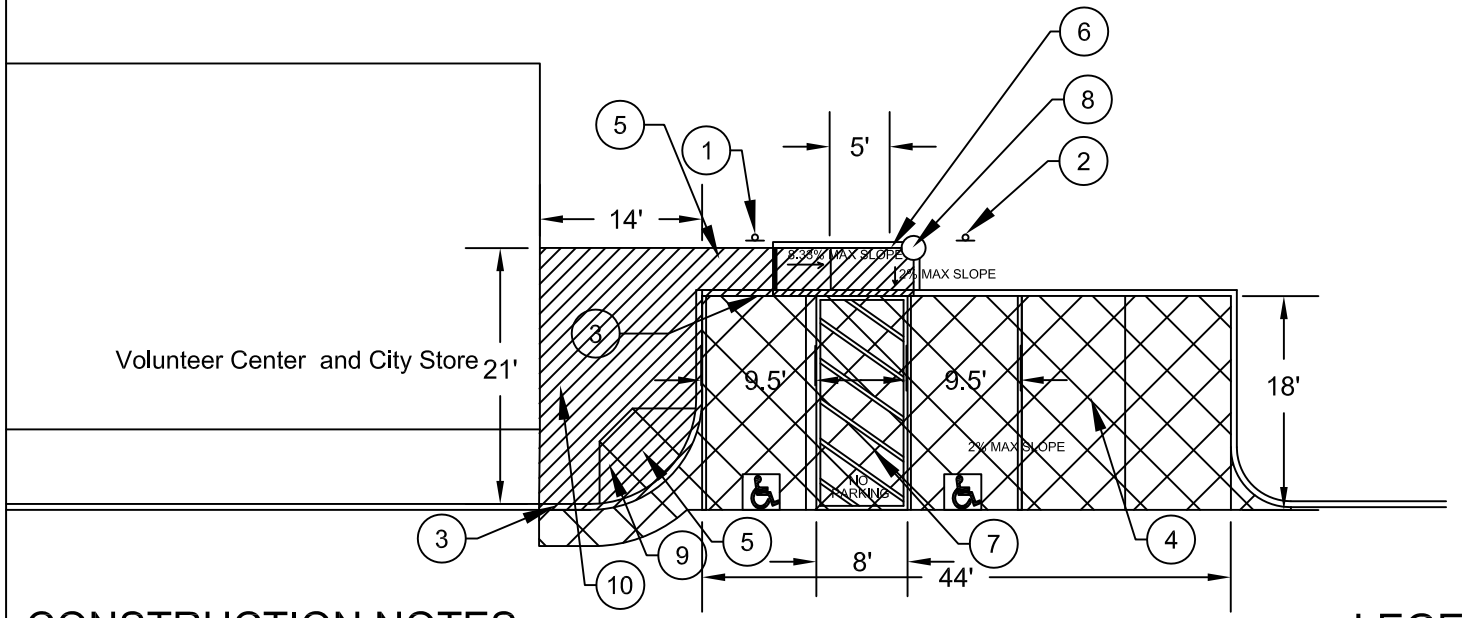

CONSTRUCTION NOTES

1. Install Sign R99C (CA) and R7-8b Per Caltrans Standard Plan RSP A90A (BY CITY)
2. Install Sign R99C (CA) Per Caltrans Standard Plan RSP A90A (BY CITY)
3. Remove and Replace Curb Approximately 46 LF
4. Grind and Overlay 2" A/C with a 2.0% Max Slope Approx. 800 SF
5. Install 24 SF of PCC Sidewalk Per APWA Std 113-2
6. Install Curb Ramp to Match Existing Sidewalk as Shown Case Per APWA Std 111-5 Case B Type 1 Modified as Shown with Detail D Retaining Curb at Back of Walk Approx. 56 SF
7. Install Double Parking Stall per Caltrans Standard Plan RSP A90A and Paint Blue Typ. Per Caltrans Standard Plan RSP A90A (BY CITY)
8. Protect Light Pole in Place
9. Remove and Dispose Curb Ramp Complete
10. Remove and Replace Approximately 214 SF PCC Sidewalk

LEGEND

R&R Existing Curb/Sidewalk	
Install Curb Ramp and Sidewalk As Shown	
2" Grind and Overlay A/C	

CITY OF BELLFLOWER

SIMMS PARK (NORTHWEST) ADA
PARKING UPGRADE

Drawn B.B. 12.3.14 Revised PSW 12.15.14

N

Towards Oak St.

SCALE 1:16

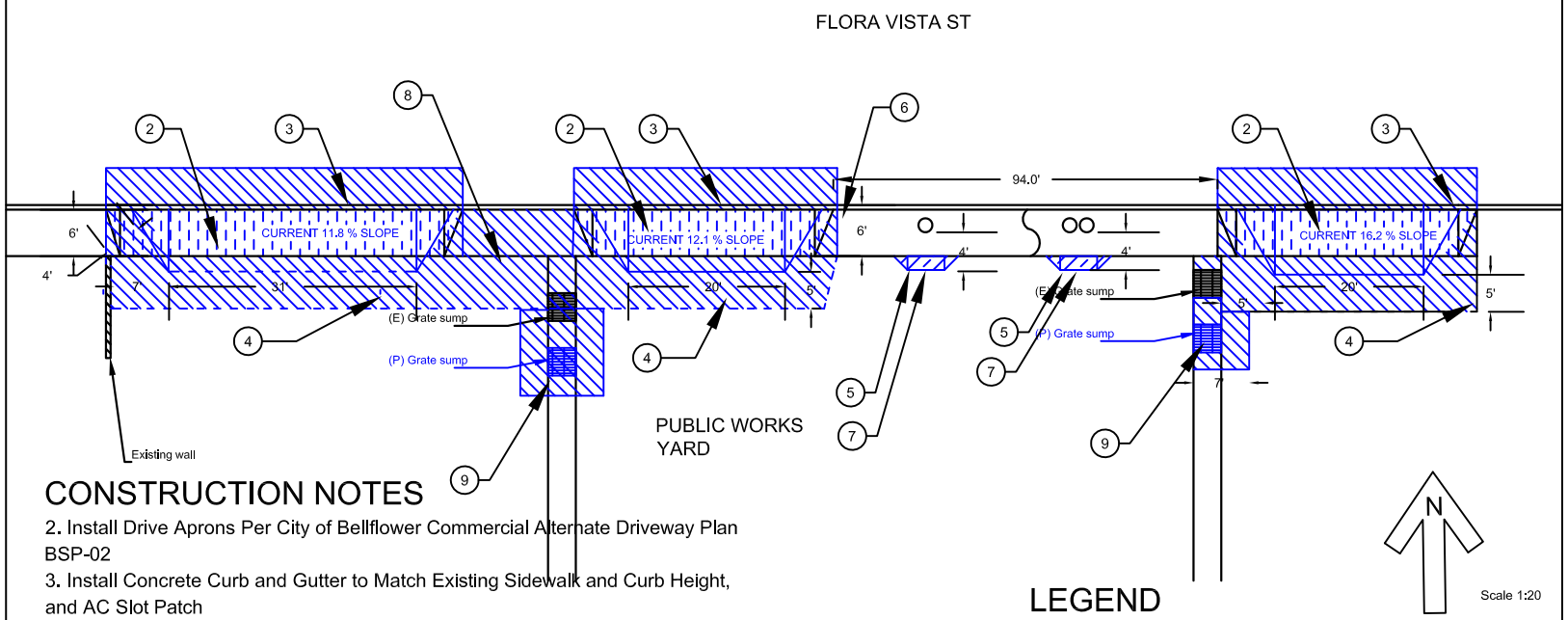

CONSTRUCTION NOTES

2. Install Drive Aprons Per City of Bellflower Commercial Alternate Driveway Plan BSP-02
3. Install Concrete Curb and Gutter to Match Existing Sidewalk and Curb Height, and AC Slot Patch
4. Unclassified 5 CY to Install Concrete Sidewalk as Indicated to Provide a Continuous Pedestrian Route
5. Remove/Dispose Existing Native Soil Adjacent to Existing Utilities. Construct a 1.5' X 4' Concrete Sidewalk with Wings as Shown
6. City to Relocate Pole and Sign
7. Install Seed and Topper
8. Remove and Replace Sidewalk
9. Relocate Existing Curb Drain and Install Per APWA Std. 150-3

LEGEND

Remove and Replace PCC Driveway Apron

R&R A/C with 2% PCC sidewalk, R&R A/C, or R&R Sidewalk

Install 4" PCC Sidewalk

CITY OF BELLFLOWER

DRIVE APRONS AT THE PUBLIC WORKS YARD

REV June 18, 2015

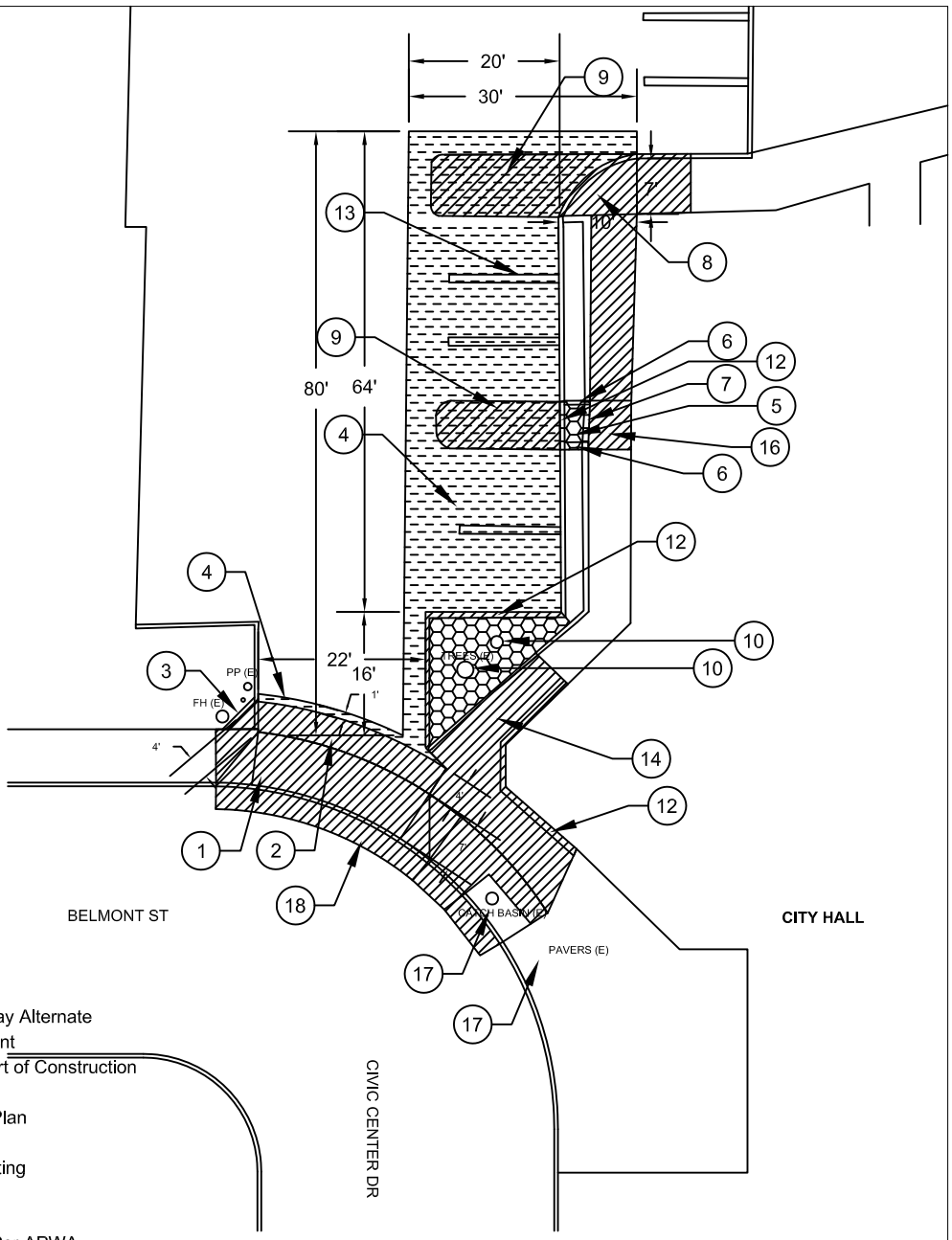

CONSTRUCTION NOTES

1. Remove and Replace Drive Apron Per City of Bellflower Driveway Alternate Standard Plan BSP-02 Max 10% Slope including 3' A/C Slot at Front
2. Excavate to Depth of 4" Existing A/C and Install Sidewalk as Part of Construction Note (1.)
3. Remove Existing Curb and Construct New Retaining Curb Per Plan
4. 2" Grind and Overlay A/C as Shown
5. Remove Existing Concrete and Replace with Sod to Match Existing
6. Remove Existing Block Wall and Railing Complete
7. Install Block Wall to Match Existing Per APWA Std 601-4
8. Remove Existing PCC Sidewalk and Replace with Curb Ramp Per APWA Std. Plan 111-5 Case A Type 1
9. Remove Concrete and Excavate Full Depth and Replace with 4" Conventional A/C on 6" CMB and Leave 2" Low for A/C Pave
10. Remove Existing Tree Complete
11. Purposely Omitted
12. Remove and Replace Existing Curb Per APWA Std 120-2 Type A1-6
13. Repaint Parking Stalls at 9' width
14. Remove and Replace Existing PCC Sidewalk
15. Purposely Omitted
16. Remove and Replace Pavers
17. Protect in Place
18. R&R 3' A/C Slot Patch

LEGEND

R&R Curb Ramp

Clear, Grub, Seed, and Top

2" Grind and Overlay

R&R Sidewalk, Curb, Gutter, Apron

N

NTS

CITY OF BELLFLOWER

CITY HALL DRIVEWAY APRON

Designer: Philip Wang

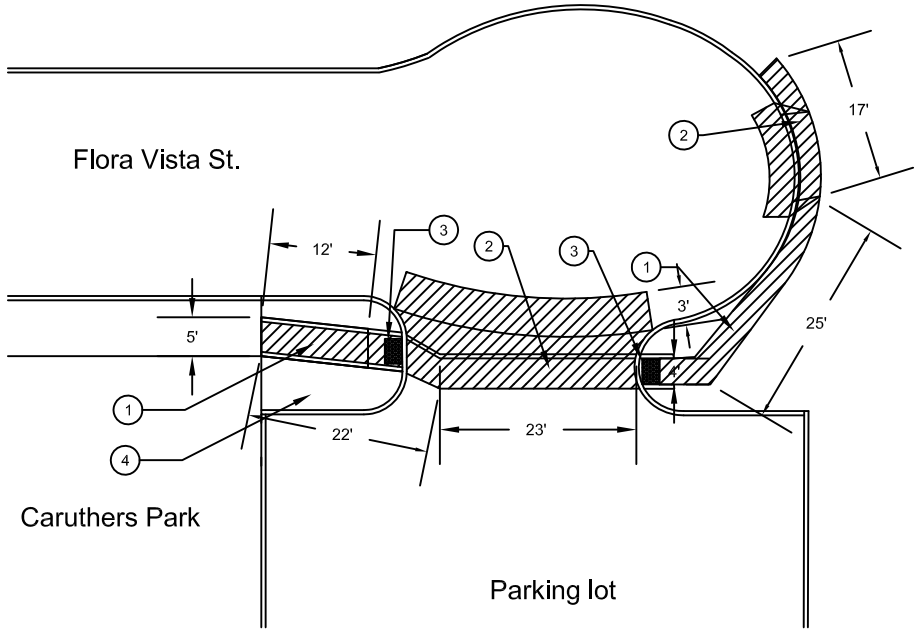

CONSTRUCTION NOTES

1. Remove and Replace PCC Sidewalk Approximately 250 SF
2. Remove and Replace Drive Apron Per City of Bellflower Commercial Alternate Driveway Approach Plans BSP-02 Including 3' A/C Slot Patch
3. Install Truncated Domes Armorcast "Blue" or Approved Equal
4. Remove and Dispose Tree Complete

LEGEND

Remove and Replace Drive Apron / Sidewalk / Install Sidewalk / A/C R&R

Install Truncated Dome Armorcast "Blue" or Approved Equal

CITY OF BELLFLOWER

CARUTHERS PARK PARKING LOT
ENTRANCE ADA UPGRADE

Drawn B.B. 12/3/14 Revised PSW 11/02/15

N

NTS

Sheet C3

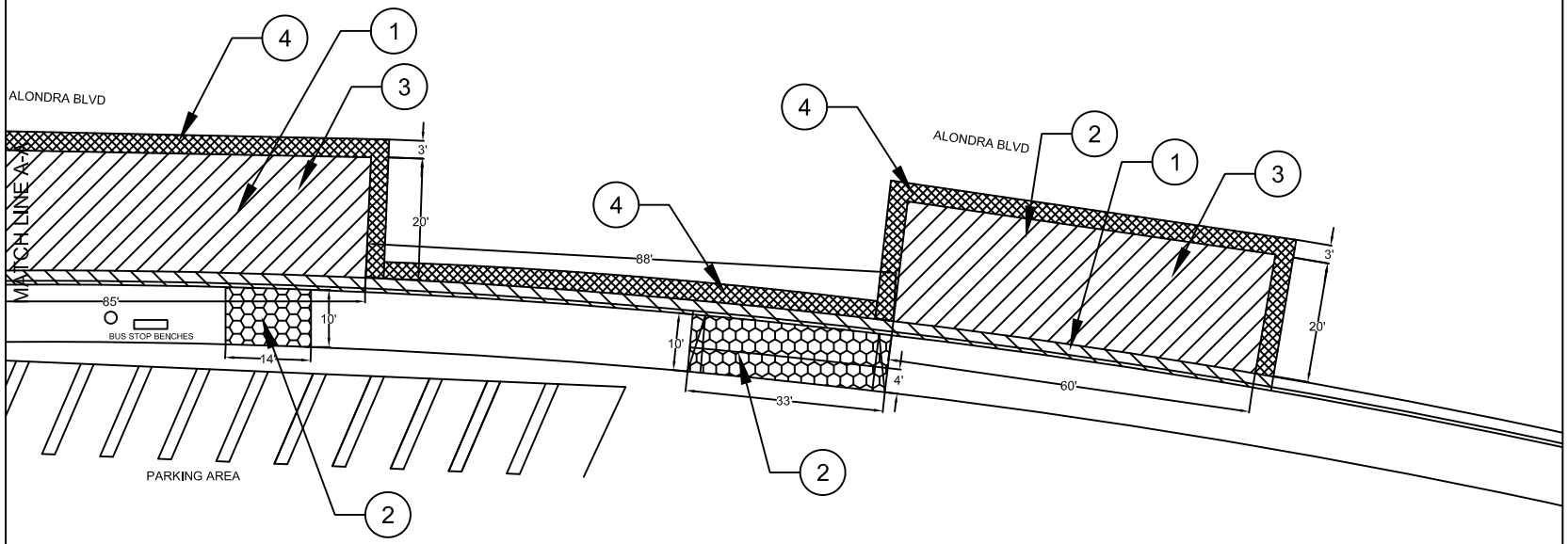

CONSTRUCTION NOTES

1. Remove and Replace A/C with Bus Pad
2. Remove and Replace Drive Aprons, Curb, Gutter and Sidewalk As Shown.
3. Construct Concrete Bus Pad Per APWA Std Plan 131-2
4. Remove and Replace A/C

LEGEND

- R&R A/C with Bus Pad
- R&R 3' A/C Slot Patch Around Bus Pad and C&G
- R&R PCC Sidewalk, Curb, and Gutter
- R&R PCC Drive Apron

CITY OF BELLFLOWER

ALONDRA BLVD AT WOODRUFF AVE

BUS PADS

N

Scale 1:30

Sheet C2

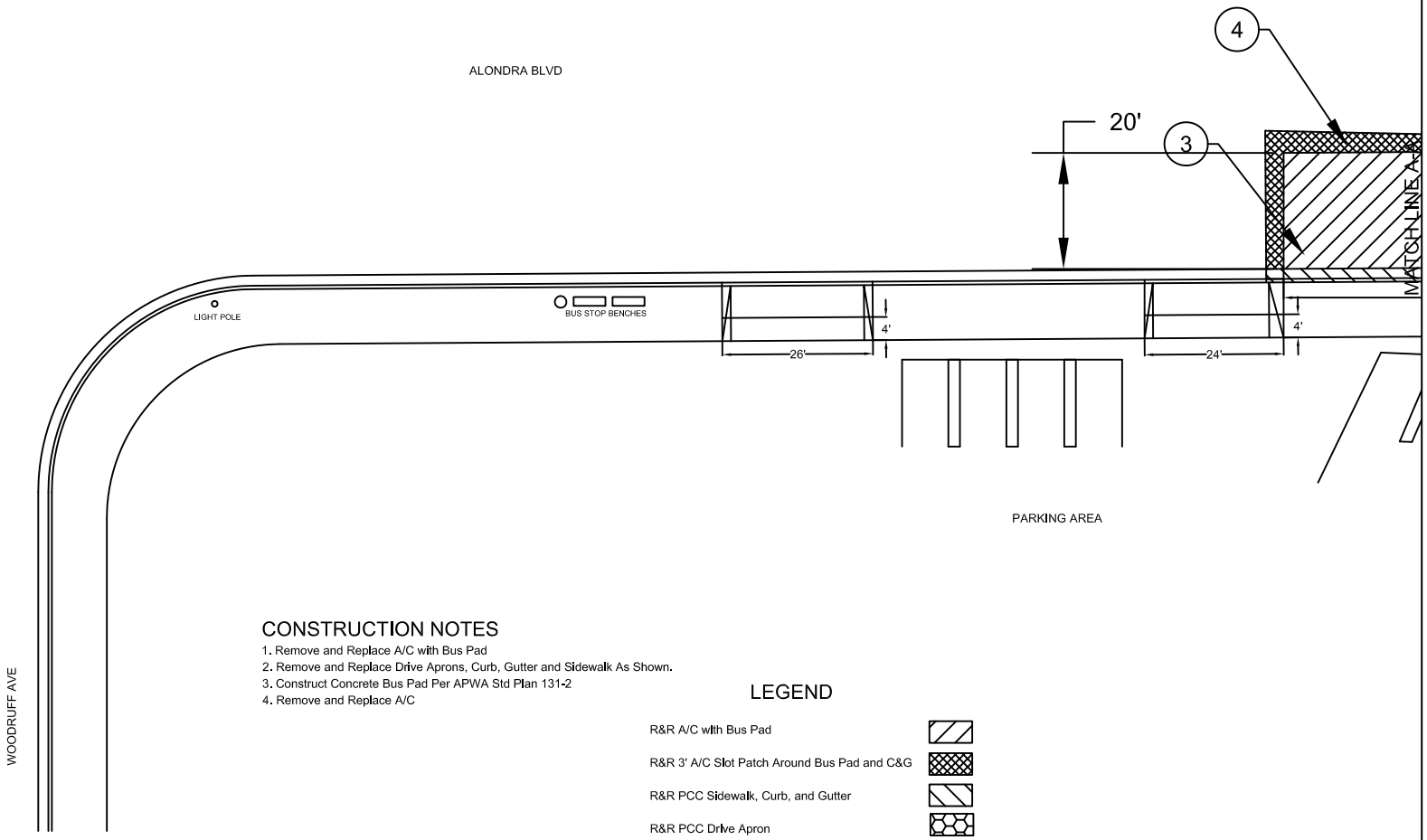

CONSTRUCTION NOTES

1. Remove and Replace A/C with Bus Pad
2. Remove and Replace Drive Aprons, Curb, Gutter and Sidewalk As Shown.
3. Construct Concrete Bus Pad Per APWA Std Plan 131-2
4. Remove and Replace A/C

LEGEND

- R&R A/C with Bus Pad
- R&R 3' A/C Slot Patch Around Bus Pad and C&G
- R&R PCC Sidewalk, Curb, and Gutter
- R&R PCC Drive Apron

N

1:30

CITY OF BELLFLOWER

ALONDRA BLVD AT WOODRUFF AVE BUS PADS

Sheet C1